PRACTICAL METAL TURNING

A HANDBOOK FOR ENGINEERS, TECHNICAL STUDENTS, AND AMATEURS

(RE-ISSUE OF "ENGINEERS' TURNING")

A PRACTICAL COMPENDIUM COVERING IN A COMPREHENSIVE MANNER THE MODERN PRACTICE OF MACHINING METAL PARTS IN THE LATHE, INCLUDING THE REGULAR ENGINEER'S LATHE, ITS ESSENTIAL DESIGNS, ITS USES, ITS TOOLS, ITS ATTACHMENTS, AND THE MANNER OF HOLDING THE WORK AND PERFORMING THE OPERATIONS; THE MODERNISED ENGINEER'S LATHE, ITS METHODS, TOOLS, AND GREAT RANGE OF ACCURATE WORK; THE TURRET LATHE, ITS TOOLS, ACCESSORIES, AND METHODS OF PERFORMING ITS FUNCTIONS; WITH CHAPTERS ON SPECIAL WORK, GRINDING, TOOLHOLDERS, SPEEDS, FEEDS, MODERN TOOL STEELS, ETC.

BY

JOSEPH G. HORNER, A.M.I.MECH.E.

Author of "Pattern Making," "Hoisting Machinery," etc. etc.

ILLUSTRATED BY FOUR HUNDRED AND EIGHTY-EIGHT ILLUSTRATIONS

LONDON

CROSBY LOCKWOOD AND SON

7 STATIONERS' HALL COURT, LUDGATE HILL

1906

PREFACE.

THE subject-matter of this volume is one of perennial interest. Although a great deal has been written on the use of the Lathe, there is no comprehensive work which deals with the present-day scope of Turning in the large shops, most writers approaching the subject from the standpoint of the amateur, or from that of the jobbing or "all-round" workman, who finds the lathe a useful appliance. Such books are valueless from the point of view of the workman in the factory, or to the technical student who desires to gain a knowledge of what is involved in modern Turnery practice.

Although it would be a hopeless task to attempt to treat the subject exhaustively in the compass of a small volume, yet the writer trusts that he has produced a sufficiently comprehensive work from which no matters of importance will be found omitted. Principles and practice in the different branches of Turning are considered, and well illustrated. All the different kinds of Chucks of usual forms, as well as some unusual kinds, are shown. A feature of the book is the important section devoted to modern Turret practice; Boring is another subject which is treated fully; and the chapter on Tool Holders illustrates a large number of representative types. Screw-cutting is treated at reason-

able length ; and the last chapter contains a good deal of information relating to the High-speed Steels and their work. The numerous tools used by turners are illustrated, and also the adjuncts of the lathe. Of the lathe itself little is said, preference being given to the practice of Turning rather than to lathe design, a wide subject, and one which is undergoing rapid changes at present.

While each aspect of the subject (it will be seen) has been approached from the engineer's point of view, it is believed that the volume will prove of much value also to those amateurs who, having mastered the principles of Turning, desire fuller acquaintance with its recent practice and present developments.

JOSEPH HORNER.

BATH,
March 1905.

CONTENTS.

SECTION V.—SCREW CUTTING AND TURRET WORK.

CHAPTER XIV.—SCREW CUTTING.

CHAPTER XV.—EXAMPLES OF TURRET WORK.

SECTION VI.—MISCELLANEOUS MATTERS.

PRACTICAL METAL TURNING

INTRODUCTION.

The Relations of the Turnery and the Machine Shop.

Extent of these Departments—Their Operations classified—Plane Surfaces—Cylindrical Surfaces—Regular, and Irregular Contours—Screw Threads—Choice of Machines—Specialisation.

THE machine shop and turnery are the most extensive departments in the average engineer's factory, employing more hands than any other single shop, and having a more costly plant of machinery. These are by far the most highly specialised of all the departments: here mere manual skill counts for little, but deftness and experience in operating the machines in order to produce the largest and most perfect results from them. These are the departments which usually possess the greatest attraction and interest for practical men—which afford the widest scope for inventive skill, and for the scheming out of quick and ready jigs for the attachment of work, and rigs-up of tools. To most, these departments seem to embody the practice of engineering in a greater degree than the others. No engineer's shop can be without a machine shop and turnery, but there are many which do not include a boiler shop, or even a heavy forge department.

If we try to take a general survey of the machine shop and turnery, the first sentiment is that of bewilderment at the multiplicity of the operations which are carried on. But it soon becomes possible to reduce this apparent chaos to order. For, after all, the hundreds of machines which occur in many

scores of different types, are differentiated far more in reference to details of construction, than in regard to principles, and essential methods of operation.

Briefly, the operations of the departments in question may be divided as follows:—

(1.) The machining of plane surfaces.

(2.) The machining of external cylindrical surfaces.

(3.) The machining of internal cylindrical surfaces.

(4.) The machining of forms which are combinations of the preceding list, and which are (*a*) regular or (*b*) irregular in contour.

(5.) The formation of screw threads.

I think that all the operations of these departments are included in the above classification. But the performance of all these by means of present-day methods involves the use of:—

(*A.*) Machines employing tools with single cutting edges only.

(*B.*) Machines employing tools comprising a multitude of cutting edges.

(*C.*) Grinding machinery.

On the above basis, let us try to systematise the work of the machine shop.

First, as to (1) the machining of plane surfaces. This is done most frequently by means of tools with single cutting edges, the tools having a narrow, almost pointed, edge for roughing, or wider edges for finishing, or being otherwise variously formed to impart special sectional outlines to the work. The machines in which plane surfaces are produced by these tools (*A*) are the planing machines, the shaping machines, and the slotting machines. The work may travel, and the tool, but for its traverse feed, remain stationary, as in the common planing machine; or the work may remain fixed and the tool travel, as in the shaper, in the plate-edge planing machine, in the vertical planing machine, and in the slotting machine; or in a lathe or boring mill, as when flange faces are tooled with a facing arm and star feed; or by similar methods.

Or plane surfaces are machined by an assemblage of cutting edges (*B*), as in the milling machine, in which the work travels under the revolving cutter, having fixed bearings, the cutter operating by its longitudinal edges, or endwise.

Or (*C*) in a grinding machine, the grinding wheel operating tangentially, or endwise.

In reference (2) to the machining of external cylindrical surfaces. This is effected in a common lathe, in which the work revolves and the material is removed by tools (*A*) with single cutting edges, the tools being stationary, except for feeds, the forms of the cutting edges being varied according to the nature of the work which has to be performed; or it is done in a vertical lathe, the work then being shallow and of considerable diameter; or the tool is revolved round the fixed work, as in some crank-pin turning machines; or it is done in a slotting machine having a circular movement to the table. Or (*B*) in a milling machine having a similar circular movement to the table. In each of these cases the tool remains stationary as far as relates to its radial distance from the centre of the table, and the work is revolved, the radius at which the tool is fixed regulating the diameter of the work. External surfaces are machined, as in lever bossing, on a drilling machine with a cutter (*A*) set in a drill spindle or bar; they are tooled also in chasing and various capstan lathes by tools (*A*) set in the capstan head. Such surfaces are also finished (*C*) by grinding, the work revolving between dead centres and a cylindrical grinding wheel being revolved against the revolving work.

The machining (3) of internal cylindrical surfaces is accomplished by tools (*A*) in the common lathe, the single cutting tool being held in the rest, or in a boring bar or head; also on special boring machines in which one or more, up to as many as a dozen or twenty, single cutters will be held in a single bar or head. The boring machines may be horizontal, or of vertical type. Small cylindrical surfaces are formed with the drills and reamers. The former are essentially a pair of single tool edges (*A*), the cutting forces being balanced on the opposite edges, and the drill shank fills essentially the function of a stiff boring bar. The reamers or broaches and rose bits are a transition between the drills and the milling cutters. Milling cutters (*B*), though not employed for boring, using the term in its commonly accepted sense, are useful for producing shallow recesses. Internal surfaces are finished accurately by (*C*) emery laps, used on special lathes.

Considering (4) the sub-section (*a*): This embraces all turned

work which is not uniformly cylindrical—all work done on shaper and slotting machine which is not entirely circular, such as arcs of circles, both concave and convex; the teeth of wheels, too, which are shaped by planing, and the hundreds of details in form which combine plane and curved surfaces. All regular forms also, shaped (*B*) with milling cutters, in which the work is moved against the cutters in straight and curved lines while fixed upon a universal table; or in which the sectional forms of the cutters are the precise counterparts of the shape to be imparted to the work. This includes all the formed cutters of all conceivable outlines, all gangs of cutters, excepting those employed for plane faces and edges, and also all rotary cutters used for the teeth of wheels, and used on wheel-cutting machines and on lathes with suitable attachments and means for effecting the pitching of the teeth.

In division (*b*) are included all forming machines, whether turning, milling, or grinding. In these the outline to be imparted to the work is first imparted to a form or former. This may be a metal form identical in every respect with the objects which have to be produced, as in the copying lathes, in which a swinging tool rest is maintained in constant contact with the revolving form, so pulling the tool to the work synchronously; or as in the forming milling machines, by a swinging slide and metal form and conical pin, a weight maintaining the latter in contact while the milling cutter operates on the edges of the work at a constantly maintained parallel distance away from the pin. The form or templet principle is applied in crowning pulleys and to other work. Edges are ground with (*C*) emery wheels in similar fashion.

Division (5) involves an apparently simple operation, yet it includes a very extensive variety of machines of all sizes and designs, some relatively simple, others very complex. Screws are cut with single cutting tools (*A*) only. There is one tool only, as in the ordinary screw-cutting lathe, or there may be a group of tools, as in the chasing and screwing lathes. The pitch of the screws to be cut may be imparted through change wheels and leading screw, as in the common screw-cutting lathe, or by means of a master screw, as in the Fox lathe and similar stud lathes, or by coercion of a group of dies, as in the chasing and screwing lathes and screwing machines. Screws are also pro-

duced (*B*) with milling cutters, and, in some cases, finished (*C*) by grinding.

The foregoing is an entirely natural classification of the subject of the work of the machine shop and turnery. It is obvious, therefore, that precisely similar operations are performed in machines which differ very widely in name and design, and in general function from one another, so that if we were to attempt the study of the work of the machine shop strictly from the point of view of the character of the operations performed there, it would necessitate the apportioning of similar operations between several different machines, this being, in fact, what is being done every day in every shop. The question of the choice of a machine for any given piece of work may be one of dimensions of the work, or of the facilities which it affords for fixing in one way or another, or of the precise degree of accuracy required, or of the relative power of different machines, or of what machines happen to be at liberty at a given time. But it is scarcely practicable to pursue these classifications into operations when going through the details of the work of the machine shop and turnery. We must rather consider the operations for which a given type of machine is primarily designed, as turning and the lathe in conjunction; planing and the planing machine together; shaping, slotting, milling, &c., in direct association with the machines for which these operations were primarily designed. Yet if one should attempt to consider the functions of any single type of machine in full detail, there is much more involved than appears on the surface. Though the main types are not numerous, the varieties are, and the dimensions pass through a wide range in each variety. The difference in the small lathe of 5 cwt. and the heavy break or gun lathe of, say, 200 tons is enormous. There are no two details precisely alike, and most are very dissimilar; yet each is a lathe. The methods of doing work in each type differ also in some respects. And what is true of these applies equally to other machine tools. Differences are due not only to mass, but also to specialisation. One need not go back more than fifteen or twenty years to note how largely specialisation has affected the machine shop. There are many machine tools now which are designed to perform just one particular kind of operation, and no other, and some of these machines are very complicated. An exhaustive treatment of the

lathes used in a modern shop is therefore impossible. But the nature of the work which is done upon all the typical and chief varieties of them, admits of description, and the methods by which such work is accomplished can be explained, and illustrated.

Other matters also call for notice if we would grasp the full scope of the operations which are carried on in a modern turnery and machine shop. The questions of quicker and slower ways of doing work, of greater or less accuracy, methods of measurement, of gauging, division of labour, and others are of too vital economical importance to be passed over. These shops are a marvellous illustration of the high perfection reached by modern labour-saving mechanisms. Many whose opinions are entitled to respect hold, too, that the highest perfection is not yet attained, but that the possibilities of machinery are capable of very wide extension in the future.

Having laid down the relations of the turnery and the machine department, let us now give our attention to the subject of this volume.

SECTION I.

THE LATHE, ITS WORK, AND THE TOOLS.

CHAPTER I.

THE LATHE AND ITS WORK.

Definitions—Lathe Work in the General Shop—Compared with Specialisation—Division of Tasks in the General Shop—Repeat Work—Lining Out—The Place of the Self-acting Sliding, and Screw-cutting Lathe—General Considerations—Dimensions of Lathe—Synonyms—Its Elements—The Bed—Taper Turning—Guide Screw—Back Shaft—Rack—Change Gears—Headstock Gears—Boring—Advantage of Special Designs—The Utilities of the Standard Lathe—Details of—The Bed Ways—Gap—Headstock Spindles—Solid and Hollow—End Thrust—Ball Thrusts—Conical Necks—Details of Methods of Fitting—Rests—Details of—Back Shaft—Lead Screw—Feed Rod—Micrometer Readings—Change Wheels—Movable Poppets—Design of—Fitting to Bed—Set-over—Traverse—Diameter as Gauge for Turning.

IF a piece of work is rotated round a fixed axis against the edge of a tool, fixed at a constant radius, and traversed longitudinally, or parallel with the axis of the work, a cylindrical form will be produced. This is turning, or boring. If the tool is of a certain width and shape, and traversed to a definite amount per revolution greater than the width of the tool, a screw is cut. If the work is rotated against a tool moving radially, but fixed in the longitudinal position, it is termed facing, or face turning. The degree of accuracy obtained in either case will depend on several things, as on the secure fixing of the work, its amount of freedom from vibration, and on the same conditions in regard to the tool. Economy results when, with the fulfilment of these, the maximum of material is removed in the minimum of time. The art of turning is briefly summarised in these few words. And yet the fulfilment of these conditions involve so much, that good all-round turners are not readily obtained.

The work of the lathe-man in the general shop embraces vastly more than it does in the shops where high specialisation is practised. In the latter, the men are skilled, it is true, but chiefly, or only in the handling of one machine, perhaps in doing all bar work produced by turret tools, or boring, or turning on a vertical mill, with no changes whatever for several days or weeks. The result inevitably is the development of a different class of men from those in the general shop.

In the general shop the lathe often fulfils the functions of other machines—not, of course, to the same extent that an amateur's lathe does, but yet to a considerable degree. It is frequently utilised for boring cylindrical work, and deep holes, and seatings, and for facing. A good deal of simple drilling is also done in it, as well as a limited amount of grinding, or of gear cutting, by attachments fixed on the rest. Instead of dividing such tasks among two or more machines, the lathe-man takes charge of all—drilling, boring, turning, facing, &c.,—within the capacity of his lathe.

By the general shop we mean that class which includes probably 90 per cent. of the engineering works in the country. Many of the shops which are specialised in some degree, and are ranked as specialists, yet handle so diverse a number of sizes, each in but moderate numbers, that they become reduced nearly to the level of the general works with regard to the methods of performing their tasks. In England the locomotive shops may perhaps be regarded as the best examples of specialised industries, and yet the methods of general shops rule to a large extent in some departments of locomotive work. A machine tool-maker, a crane-maker, or a pump and engine builder are not sufficiently committed to one type, and one size as to be able to employ special machines, excepting for some sections of the work. As examples of such complete specialisation we must go into the small-arms factories; into the sewing-machine factories, such as that at Kilbowie; to the Arsenal at Woolwich; to electrical instrument makers, cycle factories, and a few others—all these being industries which lie outside of what we generally have in mind when speaking of engineering works.

We are not blind to the great economical advantages which follow on specialisation. We know what it has done in sewing machines, typewriters, and in small-arms, not forgetting Jones &

Lamson lathes, Lang lathes, Herbert turret machines, Belliss, and Willan's engines, among others. But the greater number of manufacturing engineers cannot specialise to this extent. Even if they were inclined to do so, their customers would not allow them to. And even in shops of the class just named, the methods of the general firms are not entirely absent. Though similar pieces are made in considerable quantities, they are often produced by the same methods that would be adopted in any other shops if similar quantities were being done, assuming, of course, that these shops are equipped with well-selected tools of recent design.

In the general engineer's shop the work of the lathe has been settled within rather precise limitations. It is not the same tool to the engineer that it is to the amateur. The latter uses it for almost every operation, making of it a universal tool. He employs it not only for turning, but for milling, wheel cutting, grinding, and sometimes, too, as a planer, keyway cutter, and tap grooving tool. In the engineer's turnery, the lathe is seldom employed for anything but turning, boring, facing, and screw-cutting. And though a vast deal of this, too, has been taken away and relegated to other machines, yet enough remains to form a very large proportion of the work which is done in any shop, so that the lathe still retains the place of paramount importance among machine tools.

The work done in the general shop by the turner is subdivided between different classes of men. For example, there are men who attend to heavy lathes only, others to light ones, and it is very unusual indeed for men to be transferred from the charge of one type to that of the other. It is not, of course, that they are not qualified to take charge of either at a pinch, but that each man possesses more skill in handling the type to which he has grown accustomed than the other does. This is just what might be expected. But further, it is a fact that some good plain turners are not to be trusted with the handling of screw-cutting lathes. They would not be able to reckon the change wheels, nor to grind or set the tools properly. This is due to the fact that in all shops a pretty hard-and-fast line is drawn here, because only as many screw-cutting lathes are laid down as the demands of the shop require, and the plain turning therefore is mostly done on lathes that are destitute of screw-cutting fittings. The

work that goes to the latter is only, or chiefly, that which has to be both turned and screwed.

Again, the new types of lathes which have been coming up during from five to ten years past have invaded the general shops, and considerably modified the old methods. In almost all shops there is a large volume of repeat work, mostly in the form of studs, pins, screws, collars, flanges, &c., and it is in these that the new lathes have proved such successful rivals to the old ones. These are mostly of one of the numerous hollow-spindle types, and semi-automatic generally, rather than fully so. It is because of the great utilities of these lathes in the general shops that the demand for them in increased capacities, and greater slogging powers has been of so rapid growth. The last word has not been said yet, for already we have hollow-spindle lathes capable of taking 4½-in. and even 6-in. bars.

Lathes for bar work are the most active rivals to the products of the old class of what we may term jobbing turners—men who could turn their hands successfully to the production of any piece of work. Comparatively little progress has yet been made in the automatics in the province of face work, the tooling of castings, and of forgings, which are made in such irregular forms that they cannot be produced from bar. To a limited extent magazine attachments have been fitted to turret lathes, but their utility is mostly restricted to small pieces, and pieces of rather compact form. As yet they fail to touch materially the work of the general turner handling castings and forgings, whether of large or small dimensions.

Ordinary lathe work includes three main classes: that done between centres, face, and chuck work, and screw cutting. To perform these diverse operations a large variety of lathes and appliances are requisite, because, though wanted for general work only, the range of any one class or size of lathe is but limited.

In a good many turned articles there are other operations required, as boring, slotting, planing, or milling, in addition to that of turning. It is often a question then which section shall be done first. In the event of boring and turning having to be performed, as a hole bored, and an exterior turned, both may often be done at one chucking. Even if the hole is of great length, it can be bored with a boring bit and suitable rig-up. But a frequent practice is to bore a hole first, and then mount the

work on a mandrel between centres to effect the turning. The advantage of this is that both interior and exterior are perfectly concentric with each other. But if a deep hole is bored with an ordinary boring lathe tool, and no special pains taken, it is almost sure to run out larger at the back end, and when fitted to a shaft it will throw the exterior out of truth.

A great deal of turned work has to be lined out on the marking-off table. But this occurs chiefly when the turning forms but one section only of the tooling done on a casting or forging, and when, therefore, the turning must be located exactly in reference to other parts, centres, or planes of the job. The turning circles, then, are not only marked out, but centre popped. Often a second circle is struck and centre popped concentric with the first, to be left remaining intact when the actual turning or boring is done, as a witness that the line has been worked to truly.

There are many methods of executing turned work, and as many standpoints from which the subject may be regarded. Even if we omit some machines which are popularly termed "lathes" from the category, there yet remains a formidable number of types, and of operations to be considered. Very broadly, we may divide these types into (1) lathes used for general purposes, and (2) lathes employed for special functions only or chiefly. The first-named includes the common "self-acting sliding and screw-cutting" type, the second embraces between two and three dozen different types, each having its own well-marked characteristics.

There are two essentials which underlie the diverse forms of machines used for turning. One is rapidity of operations; the other accuracy of results. To these everything else is subordinate. Thus to take a few examples by way of illustration. The ordinary self-acting sliding and screw-cutting lathe, which in its essential elements is now about a hundred years old, is a machine in which nearly every operation of the machine shop can be performed. But there is no modern shop in which this lathe is made to fulfil all these functions, simply because it does not pay to do them in any single machine.

There are various reasons why such crowding of miscellaneous work on one machine does not pay. First, because no single lathe is capable of performing several classes of operations, all

at the highest rate of speed, and with the degree of accuracy which modern requirements demand. Second, because the workman himself does not possess that facility of manipulation which is required by the man who performs one kind of task only. In these two main reasons many subsidiary considerations are involved. Hence it follows that the common self-acting sliding and screw-cutting lathe is a machine tool which is being pressed hard by others derived therefrom. Gradually much of the work which was formerly done upon it is being relegated to other machines of which it is the parent. It remains, nevertheless, the most important, as it was, the drill excepted, the earliest machine tool in existence. A study of its range of capabilities and of its limitations will afford the best prelude to a survey of the essential designs and special capabilities of other machines derived therefrom.

The leading dimensions of a lathe are the following:—

The "centres," signifies the distance from the top face of the bed to the centre of the spindles. English and Continental lathes are designated thus, but American by twice the centres, or the "swing," in other words—the maximum diameter which a lathe will carry over the bed. A lathe will take a little in excess of its swing, due to the work dropping into the space between the ways of the bed. But it swings considerably less over the carriage, and still less over the rest. Some American firms state the swing in each case. It is usual in English lathes to give also the swing, or diameter which can be turned in the gap.

The "length between centres" is the maximum length that can be carried between the points of the headstock and loose poppet when the latter is moved right back to the end of the bed. The maximum capacity of a lathe therefore is reckoned by the height of centres, or by the swing, and by the greatest length of work that can be held between centres. But as the slide rest stands up from the bed, this height of rest governs the diameter of work that can be turned between centres. The full swing can only be carried on the face plate.

In break lathes the height of centres is given to the top of the movable bed. The capacity of wheel lathes is the diameter of the wheels which can be turned, and also that of the face plate.

Various synonyms are applied to almost all the lathe parts. The following will be used indiscriminately in this work. The

top of the bed is termed the shears, and the ways. They support the headstock, and movable poppet, and retain the axes of their respective spindles in line, in whatever position the poppet may be moved along the bed. The headstock, which is driven by the stepped cone, is also termed the fast head, and the fixed poppet. It carries the spindle, live spindle, or mandrel. The movable headstock is also termed the poppet, the movable poppet, the loose poppet, the tailstock, and the tailblock. The base of the rest is termed the saddle, and the carriage.

A self-acting sliding and screw-cutting lathe is primarily designed for turning parallel surfaces longitudinally, for surfacing

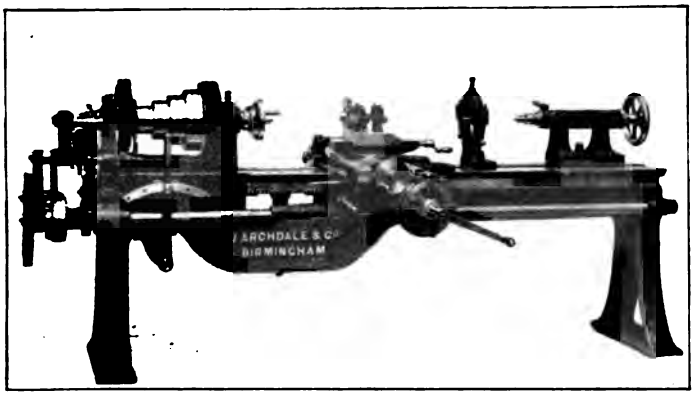

Fig. 1.

across, for boring, and for cutting all screws that come within its range. The combination of these functions in one machine involves several compromises, and compromises are not desirable in machine-tool design. Figs. 1 and 2 will enable us to grasp all the essential elements which underlie the construction of the standard lathe.

A typical standard English lathe of 6-in. centres is shown in Fig. 1, by James Archdale & Co. Ltd., of Birmingham. It is fully equipped for self-acting sliding, surfacing, and screw cutting, with lead screw, back shaft, and rack. But besides this it is marked by some special features. Feeds for the back shaft are changed by the lever seen below the headstock without stopping

the lathe. The back shaft is driven by gears instead of by belt. There is a quick withdrawal movement to the tool for use when screw cutting, the rack is of forged steel, instead of being cast, and this and all gears are machine cut. The lead screw is protected with a long cover on the cutting side of the rest. As is usual in English practice, these lathes are supplied with or without gaps, but identical in all other respects.

Fig. 2 is a heavier lathe, of higher centres, 12 in., by George Addy, of Sheffield. It is completely equipped for screw cutting, and with back shaft, and gap. The bed is carried down below the gap right to the ground. The cones are large and wide, and the head is powerfully geared for the high-speed steels. The back shaft is gear driven, and four changes are obtained with one set of wheels. Feeds are controlled by the handle in front of the headstock without stopping the lathe. The loose head has provision for taper turning. The lead screw being heavy is supported about the middle of its length in a tumbler bearing. And in accordance with present-day practice, the rack and the change wheels are machine cut.

Taking these as good types of modern English lathes, suitable for general work, let us go through their points and note both the adaptabilities and the shortcomings of all standard lathes.

In the first place, the bed is a compromise. It is used for turning work of all lengths within its range. But since on most lathes the turning of short pieces predominates, beds are subject to greater wear by reason of the movement of the saddle of the rest in the vicinity of the headstock, than they are at positions farther away. Again, work of diameter larger than the normal swing of the lathe over the bed can only be turned by cutting the bed to form a gap which has to be filled up when the gap is not in service. The fitting, if imperfect, sometimes interferes with the accurate turning of ordinary work. And the gap being of unvarying width, is sometimes too wide—the rest overhanging unduly—or too narrow to take a particular job. Though in the work turned in an ordinary lathe, short pieces predominate, yet it often occurs that axles and shafts beyond the range of the bed have to be turned, for which special rigs-up are sometimes made on ordinary lathes, but which are only of the nature of makeshifts. In these particular directions, then, modern practice embraces the following:—

Fig. 2.

Lathes with very short beds, and, so to speak, "all gap," to be used only for facing, and for the turning of short edges. Lathes without gaps for the turning of work only within the normal swing over the bed. Lathes with long beds, other than break lathes, with sliding gaps capable of affording varying widths of opening to suit jobs within a wide range. Lathes with duplex rests, carrying two or four tools. To turn a massive piece of work which cannot be done beyond a very slow speed—perhaps, say, two or three revolutions in a minute—the single cutting tool is far too wasteful of time, and combinations for the use of two or even four tools are then an economical necessity. The same remark applies to long work of small diameter, driven at a high speed; hence the special shaft, and axle-turning lathes have two tools operating at once, or provision is made for turning more than one shaft at a time. These lathes also have specially long beds for the turning of axles and shafts, combining special supports to steady slender work against the stresses of cutting, besides provision for using more than one cutting tool at once.

The standard lathe cannot turn long tapers, nor convex and concave surfaces automatically. Short tapers suitable for piston-rod ends, and friction cones can be done by slewing the tool holder of the slide rest to an angle. Some few lathes have the movable poppet made to set over for turning long tapers, but that is not standard English practice, though adopted to a limited extent here. Two types of special lathes therefore occur in modern practice—namely, taper-turning lathes, in which long tapers are turned by means of change gears placed at the right-hand end of the bed, or by a slide, actuating the cross slide of the rest; and crowning, or pulley lathes, in which a rest having a curved guide controls the movement of the tool. For turning other curves and any other special profile forms, profile lathes are used to a slight extent. In the common lathe all such forms are turned in a tentative way only, often assisted by means of templets and gauges.

Looking now to the essential mechanisms by which the automatic movements are imparted to the tool held in the post of the slide rest, we note two—one longitudinal, one transverse, and operating one tool only. There are three agencies by which the longitudinal movements are imparted. One is the lead, or guide screw, another the back shaft, the third a rack and pinion

actuated by a spindle; and each is operated directly from the cone pulleys in the fast headstock. The movement for cross traverse is automatic in one only—namely, from the back shaft.

The combination of all these movements in one lathe is a compromise. It multiplies the gearing and the fittings, and the care necessary to keep every detail in order. The guide screw is intended to be used only for its legitimate function, which is the cutting of screws. As a master screw, it is most desirable that it be maintained in a condition of absolute perfection. This is the reason for the introduction of the back shaft, and of the rack and pinion, which alone should be used for plain turning.

There is a certain facility which has to be acquired for the cutting of accurate and clean screws, which usually relegates this class of work to a distinct body of men in the turnery, and hence the leading screw is commonly omitted from the lathes in which turning only is done, and the lathe is correspondingly simplified. Those lathes have the back shaft and rack, and form the large class of the "self-acting sliding lathes."

When such lathes have to be occupied wholly or chiefly on plain parallel turning, then another step is taken, and duplex rests for two, or for four tools are often introduced. The larger the lathes and the heavier the work which they have to perform, the greater is the gain by the duplication of rests. In lathes of large swing, and short beds,—the face and tyre lathes—four tools may often be cutting at once, either wholly turning, or two turning, and two boring.

Since the pitch of any screw to be cut is obtained by the ratios effected by the substitution of change wheels at the left-hand end of the lathe, the time needed to effect these changes is too important an element to be disregarded in the case of numerous and frequent alterations having to be effected. For such cases, lathes are constructed in which for each pitch required, a master screw is provided, fitting by a sleeve on the end of the rod to which the tool holder is attached. These are obviously suited for the cutting of short screws, such as those on boiler stays, the length of which does not exceed the length of the master screw. In the screwing machines proper using dies, other methods are adopted.

The value of the ordinary screw-cutting lathe lies in the wide range of pitches which can be accurately cut on long shafts.

The possible combinations are very great. Any screw sections can be imparted by grinding and setting the tool suitably, and any diameters within the swing of the lathe; and also screws of single, double, and treble threads, and of even, and fractional pitches.

The preservation of the leading screw for its proper function is so very important that its use would not be permitted in a good shop for plain turning. But a good many lathes are constructed in which the screw is made to fulfil both functions, by the simple device of keywaying it throughout its entire length, the keyway then being used to actuate a set of gear for feeding only—the clasp nut being thrown out of engagement the while. This is a practice which is not to be regarded favourably, and the majority of lathes in America have the feed rod distinct, only it is placed not as a back shaft, but in front, below the leading screw.

The change gears are operated from the pinion on the tail end of the headstock mandrel. The mandrel is, as a rule, solid, and renders the lathe, therefore, unsuitable for the economical turning of numerous similar short pieces of work, as studs and pins, and for the use of split chucks. The turning of pins and studs between centres is so slow a process that most work of this kind is relegated to the hollow mandrel lathes, of which numerous kinds are obtainable. These are generally fitted with a capstan rest, holding from four to half-a-dozen tools, and have long taken the place of the solid mandrel lathes for this class of work.

The power and speed available to drive the lathe are constant; but the power and speed required to operate the tool are variable. The variations are obtained by the stepped cones, and the back gear of the headstock. The quick driving for light work takes place directly from the cone on to the mandrel, the back gear being thrown out; the slow driving for heavy work from the back pinion and its wheel to the front pinion on the back mandrel and the front wheel on the main mandrel. The gearing, however, gives but one difference or step, but the three or four steps on the cone pulley afford corresponding gradations of the speeds. Several modern lathes include another set of intermediate gears, while nearly all heavy lathes have a set of gears exceeding in power the standard ratio, hence termed "treble-geared lathes." In some of these the power required is so great that the gearing is arranged in quite a different manner from that seen in the figures, the cones

being removed from the main mandrel, which is then driven from gear set on the periphery of its face plate.

The back shaft is driven direct through the cones, or through cones and back gear. The motion is transmitted from the mandrel either through change wheels, or through a belt driven on cones. The former is the usual practice in the smaller lathes, the latter is more frequent in the larger ones. In both cases, reversal of the direction of movement is provided for by means of a plate carrying two wheels—one for running directly, the other indirectly, from the mandrel.

The lathe used as a boring machine is not so suitably equipped for that function as the special boring machines. For boring from the slide rest the tool is insufficiently supported for deep holes. For boring by means of a bar and cutters, the work has to be rigged up on the saddle with some difficulty. The latter has no provision for elevation and depression, so that the range of depth which can be got on the lathe is extremely limited. It is not easy to support a slender bar next the work. No more than one hole can be bored at a time, whereas it is often desirable that two holes shall be bored simultaneously. To bore a cylinder, therefore, on an ordinary lathe is a practice pretty nearly discarded in favour of the use of special boring machines. These often bore, in medium sizes, a pair of cylinders at once, in large sizes a single cylinder only, but with its axis set vertically, so that the cuttings fall down clear of the tool, and the casting does not sag.

In reference to accuracy, a lathe which is used indiscriminately for all purposes cannot be expected to produce results so good as those which are produced on special machines. Round every machine many special tools and appliances, gauges and templets, accumulate in time, all tending to increased accuracy as well as cheapness of production, and the attendants learn to do one thing well. But this apart, the design and construction of special machines tend towards improved results. When a machine is designed for exceptionally heavy duty, the framework, the spindles, and the gearing are made of exceptional dimensions and proportions to withstand not only cutting stresses, but vibratory stresses. Every special machine is fitted with details which render it more complete and capable of producing a higher degree of truth than any general machine is capable of.

Having observed the principal functions and limitations of the standard self-acting sliding and screw-cutting lathe, we are in a position to consider the numerous details of standard lathes, and their utilities in the general shop chiefly.

Considering the lathe in detail:—It is seldom judicious to select a short bed. It is better to exceed the standard lengths by a foot or two, for even though the extra length may be seldom wanted, yet there it is when occasion arises. It is a tedious and costly job to rig up a temporary extension of a lathe bed. The standard length of bed in feet is usually equal to the height of centres in inches, thus that for a 5-in. lathe is 5 ft. It is better to have one of 6 ft., or even 7 ft. would often be desirable.

The question of vee'd or of flat ways is, I think, rather a minor one when the modern lathes of the best makers are concerned. Flat slides wear longer, but a slight amount of wear of the faces and vee'd edges, and of the inner edges and tongue in the poppet base, throws the parts out of alignment; while with top vees the wear is uniformly downwards, the alignment remains unaffected, and there is no cross working. The height of centres will be affected by wear, and the alignment in that direction will be lost sooner than in an English lathe; but that is of less consequence than loss of alignment in the horizontal plane. Since, however, the modern practice of the best firms gives the carriages a long and a continuous bearing on the vees, the wear is delayed for an indefinite period.

The gap lathe is a tenacious survival from the past when a single lathe was expected to fulfil many functions. At the present time it is of less value than formerly. This is partly due to increasing specialisation of work, partly in consequence of practical objections. There is a broad national difference also, since while the gap is distinctly English, it is rarely included in an American-built lathe.

The arguments in favour of the gap are these:—That by its employment work of larger diameter than that which can be swung over the bed can be taken. In most cases the gap just doubles the diameter which can be turned. This is considered to be a great convenience in English shops on the ground that the general hand is able to deal with a wide range of work, both large in diameter, as well as long, when his lathe has a gap bed. It often enables a man to carry a piece of work right through

which would otherwise have to be divided between two men, as, say, turning a length of shafting, and its pulley, or a piston, and its rod. The gap lathe is therefore of undoubted value in shops which do a general class of work, and particularly in small jobbing firms where the tools are limited to a few types. These are strong points in favour of this type of bed.

Objections to the gap are that it is only of partial value because its length is limited to a few inches, so that any thick piece of work of large diameter cannot be got in. The one which appears to be most serious at first sight is, that the gap weakens the bed by breaking its continuity, and interferes with turning ordinary work held between centres, where the carriage of the rest has to be brought up close to the headstock. Though a filling-in piece is inserted in such a case, that is liable to spring out of truth with constant service, and interfere with the perfect operation of the rest.

These objections are often more theoretical than real, but there is a basis of fact in each. Yet the gap is so valuable that it is retained, and the above difficulties are got over in various ways, thus:—To increase the width of gap, lathes are constructed in which the width can be varied to suit work. The breaking of the continuity of the bed receives compensation in good designs by carrying plenty of metal down below the gap, or by bringing metal right down to the ground in the form of a supporting leg beneath. With regard to the springing caused by the ordinary bridge piece, this is minimised by attaching it in cantilever fashion by one end only.

Whether a headstock spindle shall be solid or hollow is a question which requires consideration, and the answer must depend on whether there is a considerable section of work likely to be done for which the hollow spindle would be advantageous. Many hollow spindles are too small to take a hole that will admit a really useful range of work. On the other hand, increasing the size of the spindle adds to the size and weight of the bosses of small chucks. Few hollow spindles outside the regular turret lathes have any arrangement for gripping rods at the rear as well as at the front end. These two imperfections limit considerably the value of the hollow type of spindle as usually applied to the common lathe. If a spindle is made hollow the hole should at least be of a serviceable size. Note should also be made of

the value or otherwise of the arrangements for taking end thrust. A few spindles of this class have the end thrust taken by ball bearings, others by shoulders. The present tendency is undoubtedly in favour of hollow spindles with ball thrusts, and if suitably proportioned and well fitted they often serve useful purposes on the common lathe. The hollow spindle is of service in cases where a good deal of stud and bolt turning is done from the bar, but for occasional work of this kind the grip chuck on a solid spindle is sufficient—lengths being cut from the bar for insertion in the chuck.

In recent years an immense number of English lathes have embodied this design. Fig. 3 illustrates a typical head of this design. The convenience of being able to put in a bar

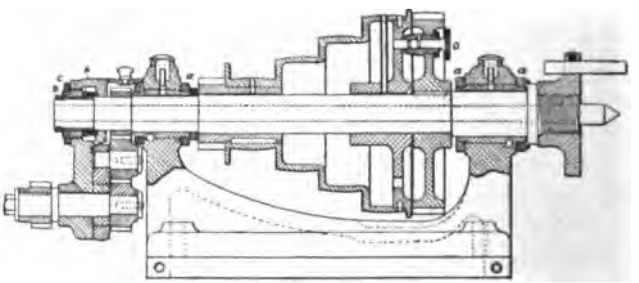

Fig. 3.

from the back, turn, and cut off in successive lengths, instead of preparing a number of short lengths and chucking each separately, outweighs any disadvantages due to the absence of the bridge at the rear, and the thrust pin, which latter is done away with, and an even better form of thrust substituted in modern lathes. A hollow spindle involves larger bearings, and this is a benefit, because more durable and steady than small bearings. The hollow spindle also permits of the use of split chucks and plungers.

The question of taking up end thrust is more simple of solution in solid mandrels than in hollow ones. In a solid type, either a pointed tail-pin is used, or a direct end thrust taken by the bridge-pin, with or without washers. In the hollow form, some form of collar, or a ball race is essential. In Fig. 3 the end thrust is received on the front and back of the collar A, its

wear being taken up by the screwed collar B and lock-nut C. By this arrangement the adjustment of the mandrel is not altered if the latter gets warm while running. The friction washers and surfaces are hardened, and they run continuously in oil in the chamber.

Ball thrusts are fitted to a large extent in small lathes, and they answer admirably for this purpose, making the operation of drilling very much easier. There is doubtless little to choose between a well-made collar thrust, like that in Fig. 3, and a ball thrust; but the latter will run with less attention, and will stand more dirt, just as in a bicycle, it will run for lengths of time without attention, during which a plain bearing would be ruined, if not oiled and cleaned or protected from dirt. There are two alternative positions in which the ball collars are fitted, in front of the front bearing of the headstock, and in front of the rear ditto. The latter position affords more security from access of dirt and cuttings than at the front, where the turning is close to the bearing; but this may be compensated for by adequate guarding of the bearing with overhanging flanges. Both types of grooves are used for the balls—the vee'd and the concave, and another form shown in Fig. 4 is adopted to a certain extent. This shows the thrust taken before the rear bearing, one collar being checked into the bearing slightly, and the other forming one of the nuts which serve to hold the back-gear pinion in place, both washers being of course hardened and ground. Another plain collar at the back of the bearing keeps the mandrel from endlong motion.

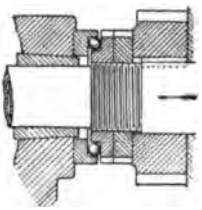

Fig. 4.

A solid mandrel with conical necks running in hardened steel cones is the older standard English design. There is perhaps not much to choose between steel and hard bronze, but preferably it should be the former. Conical rather than parallel necks seem more suitable for lathes of small dimensions, notwithstanding that the parallel necks in brass bearings are better for lathes of above 10 or 12 in. centres. Much, however, depends on the excellence or otherwise of the fitting and on the quality of the materials. Several leading firms make good lathes with bronze bearings; some, too, give choice of either type.

The mandrel fitting of a lathe is a very important detail, and a purchaser must depend greatly on the reputation of the manufacturing firm in this matter. To say that mandrel necks are of hardened steel, ground into hardened-steel collars, does not give absolute assurance of accuracy or durability, because these depend on the quality of the steel used, degree of hardening imparted, and the way in which the grinding is done. Practice varies, too. In some high-class lathes, spindle necks are not hardened, but a specially hard and tough quality of crucible steel is used, and this, when turned and ground, is sufficiently durable. So hard and tough is some of the steel used in good lathes, that from three to four days of lathe work will be occupied in boring and turning a single hollow spindle. Other good lathes are fitted with spindles of wrought iron case-hardened, and these also give good results. A few of the best American small lathes have steel spindles hardened in mercury, and ground with diamond dust, but this practice is exceptional. When bronze bearings are used they are generally specified to be of "special bronze," or "hard bronze," or "hard gun-metal," but here, too, the purchaser must depend on the honesty of the manufacturer. For these reasons, therefore, the best assurance of good material and workmanship is the reputation of a good firm, and the paying a price corresponding with the character of the materials and workmanship expected. The best fitted spindles do not show any sensible wear for many years, while poorly fitted ones run hot, and become abraded sometimes within the first few months.

Fig. 3 has the bearing necks hardened and ground, and the hole for the coned centre is ground after the spindle is assembled in its bearings. The spindle bearings are of hard phosphor-bronze, split, and coned on the outside to permit of taking up wear, which is effected by the nuts *a a*. This is a variation from the older practice of fitting spindles in steel coned bushes; but there is no doubt that the bronze bush will ultimately drive out the steel one from use. The latter is more costly, and if not made excellently will give much trouble, while, as to wear, a phosphor-bronze bush will last for a surprising time before even any slackness makes its appearance.

The cone pulley is turned inside as well as out; the back-gear pinion is a separate casting fitted to the bore of the cone,

with a long boss and key. No spanner is required for locking the front-gear wheel and spindle to the cone pulley, a sliding stud D with milled head being provided for the purpose. Proper provision is made for lubrication everywhere.

In the selection of the rest, the English compound type, rather than the American type, or that with the rise-and-fall device, is to be recommended—if there were no other reason than that because it permits of heavy and deep boring, such as cannot be done on the latter. And, besides this, there is the fact that the longitudinal feed of the American type can only be effected by moving the entire carriage, which does not lend itself to delicate movements, while the English has the advantage of permitting of minute feeds by hand, operating the tool slide. The four bolts on the latter, or the clamping plate in the smaller sizes are immensely better in several respects than the little slotted tool-post of the former. The English rest is more adaptable to the employment of the various tool holders, than the American is. Also, a piece of work can be much more readily bolted down for boring, or drilling, or milling, &c., on the English carriage than on the other. This is partly due to the necessary thinning of the American slide, caused by the raised vees; while the English type with flat bed allows a greater thickness of metal to be put into the saddle at a very vital part.

The base of a rest should be graduated into degrees for turning tapers, and boring-in at definite angles. Friction or clutch feeds should be embodied for throwing the sliding and surfacing motions in and out instantly. It is advantageous to be able to run the cross slide off the carriage at the back, leaving the latter clear for bolting work down to for boring.

Sometimes it is well to select a lathe in which the feed rod and lead screw are both in front, and with automatic stops, and throw-out. This arrangement is advantageous when large numbers of similar pieces have to be turned and screwed of exact lengths up to shoulders. It is also sometimes handy to have lead screw and feed rod connected, so that the same change-wheel train can be used for both. It is convenient to be able to feed in thousandths of an inch precisely, and without measurement, and this is embodied in the rest slides of many lathes.

The use of micrometer readings on the screws of the rest

slides is in growing demand. Given true screws working without backlash, micrometer divisions on a disc, or on the spindle boss save a great deal of time, and calipering in any work, more particularly in that of a high-class character. Many lathe-makers supply these with graduations suited to purchasers' requirements, the usual divisions being into sixty-fourths, and into thousandths of an inch, the value of which when combined in one lathe can hardly be overrated. Stop screws as fitted to most American rests, and to many English also, are desirable, as saving time otherwise occupied in checking by calipers or rule. A quick withdrawal motion to the top slide of the rest is fitted to many of the best lathes, and is useful for arresting the progress of the tool quickly.

A burning question is that which concerns the arrangement of change wheels, whether the time-honoured train with the swing plate, or the nest system, of which so much has been seen in recent years. The nest gears are now included in a good many small lathes. The objections which have been made to this system on the ground of the rapid wear of the small gears is not borne out by experience; neither would this count for much in light lathes doing light duty only, and, as a matter of fact, these gears are largely fitted to heavy lathes also—not only to lathes, but to heavy milling machines, heavy boring mills, and other machine tools. What is good enough for these is certainly good also for lathes of 5-in. or 6-in. centres.

When numbers of frequent changes have to be made, a Hendey-Norton lathe, or one of that type, should have the preference before one in which gearing-up has to be done on a swing plate. For rapid changes in screw cutting, when short screws, and gas threads are concerned, the English method of change wheels is clumsy and slow. It is suitable for long screws, or for the repetitive manufacture of similar short screws. In fact, in a good many heavy turret screw-cutting lathes the ordinary arrangement of change gears is adopted. And often some days may elapse before any alterations have to be effected. But for the variable work just now mentioned, no one can afford to waste time in effecting several distinct changes in gear in the course, say, of a few hours.

The question of back gears of finer and coarser pitch for first and second motion wheels need not influence one's choice. In

theory this is the proper arrangement, but in practice it counts for little or nothing.

The movable poppet should preferably have the front edges of the brackets curved inwards to clear the handle of the tool slide when working in line with the bed, as in Fig. 5. Yet the symmetrical form retains its place in a considerable proportion of the lathes made now, the exceptions being comparatively recent.

Again, instead of the screw-bolt for clamping the poppet down, a cam with a lever answers the purpose as well, besides being quicker and handier. This arrangement is shown in Fig 5.

Another point in some lathes is the fitting of the poppet loosely to the bed, the latter having an inverted vee—the original Sellers design—so that clamping down the poppet pulls the washer plate up to the vee, and the poppet tongue to one side of the bed always, so that its alignment remains unimpaired, even though the tongue may become a little loose between the shears. The internal screw of a poppet is properly prolonged to push out its own centre (see Fig. 42, p. 62.)

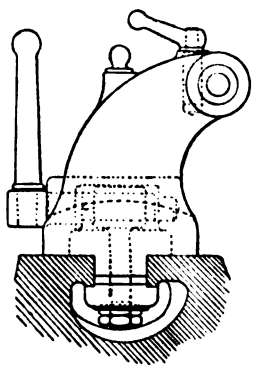

Fig. 5.

The set-over fitting of a poppet for taper turning might be included with advantage more frequently in lathes. It is becoming of recognised value in a good many engineers' lathes of English build, as in Fig. 2. There are objections to its embodiment on the score of possible inaccurate central setting of the head, but this is largely a question of the method of fitting the parts. Some English designs of this kind are reliable enough when used with reasonable care.

There is no reason why a known amount of traverse should not be given to the mandrel of the loose poppet, to facilitate exact drillings. Yet it is rarely done. One lathe-maker does so, cutting the screw with ten threads to the inch, and dividing a disc on the handwheel into ten. Each turn of the hand wheel therefore advances the mandrel one-tenth of an inch, and a tenth of a turn moves it a hundredth of an inch. An alternative to this is to divide the outside of the barrel into divisions, like a

rule, so that its amount of projection can be seen at a glance. This may be done without difficulty by transferring the divisions from a good steel rule to the poppet barrel, with scriber.

In some lathes the poppet spindle is turned to a precise diameter, and used to set the point of the cutting tool by as a gauge, setting the point to just touch the spindle. To turn a smaller diameter the micrometer screw of the top slide of the rest is moved forward, and set by its index. To turn a larger diameter it is run back, taking a half-turn more than required to take up backlash, and then set into its proper position.

CHAPTER II.

The Forms and Functions of the Tools.

The Conditions which govern Efficiency—Quality of Metal being cut—Tool Formation—Speeds, Cut, and Feeds—Lubrication—Stiffness of Lathe—Tool Angles—How Determined—Rigid Systems considered—Hand Turning as a Training—Tools for Roughing and Finishing—Essential Formation—Difference between the Two Classes—Types of Roughing Tools, and their Angles—Shavings and Chips—The Graver—Practical Issues—Clearance Angles—Direction of Feeding—Side Top Rake—Pointed Tools—Roughing Tools—Methods of Presentation—Cranked Tools—Knife Tools—Roughing and Finishing Cuts—Spring Tool—Height of Tool.

IN the work of the lathe, efficiency is estimated by the quantity of cuttings removed, consistently with accuracy and good finish. The amount of metal that can be removed in a given time depends on four things—(1) the quality of the metal or alloy being cut; (2) the grade of steel of, and the forms of the tools used; (3) the cutting speed, and the depth of cut, and feed; (4) the volume and the efficiency of application of the lubricant when such is employed; and (5) the strength and the stiffness of the lathe.

(1.) Quality of metal influences results in two ways—first, as to whether it is hard or soft; and, second, whether it is crystalline or fibrous. Its degree of hardness or softness determines whether much or little can be removed in a given time; or, what amounts to the same thing, whether the speed of cutting can be slow or rapid, and the feeds fine or coarse. Its crystalline, or its fibrous nature renders a difference in the top angles of the tools necessary, due to the difference in the breaking up of the crystalline into chips, and the curling off of the fibrous in shavings.

(2.) The materials used in the tools must be harder than those being cut, and yet, without being brittle, sufficiently

tough and strong to maintain their edges unbroken and undulled for several hours, and sometimes, with adequate lubrication, for several days in succession. But no steel would retain its edge for long unless both strength of form and suitable incisive angular forms were embodied.

The forms of the tools are a most important factor in determining the amount of metal which can be taken off. Depending on this, their action varies from sweet and full cutting, to that of mere scraping, and the tools that are suitably shaped for one are not adapted for the other. The forms of the numerous cutting edges are subject to much variation, but in essentials they are reduced to a very few types.

Tool formation involves three essentials—penetrative capacity, clearance or relief, strength, and durability—each of which is to some extent opposed to the other, so that a cutting tool is a practical compromise, because there is no ultimate test, save that of practice, for estimating its efficiency. The test is the amount of material removed in a given time, consistently with the permanence of the tool edge, and with the accuracy of the surface cut. From this point of view the question of the keenest cutting edge can never be considered alone, but only in relation to its capacity to continue cutting for many hours in some cases, or for several days in others, without being removed for re-grinding. The less re-grinding necessary, the less re-setting has to be done, and a tool must never be re-set in the midst of a finishing traverse. As long, also, as a tool remains fixed in its holder, and capable of clean cutting, a number of pieces of work can be shaped to uniform size within the limit allowed.

(3.) The speeds, depth of cut, and feeds of cutting tools stand in inverse relation when operated under similar conditions. Within any set of existing conditions, the higher speeds are therefore only possible with shallow cutting, or with finer feeds than those which can be utilised with slower speeds. If the depth of cut, or the feeds, or both are increased, the speeds must be reduced proportionately. Recent practice in drilling favours higher speeds and finer feeds. But generally, in turning, the higher speeds are not so suitable for roughing down, as deep cutting, or coarse feeds are. Tables are of little value, though approximate rates of cutting different metals usually afford a convenient basis to start from. It is safe to adhere nearly to

these, and obtain higher efficiency by deeper cutting, or coarse feeding, and, most important of all, in some materials, by the best possible lubrication.

(4.) It appeared as though the limit had been reached in tool efficiency, until the advent of the high-speed tool steels came like a revolution. But all that can be known about the most suitable formation of tool points is perhaps known, and is put into practice in modern tool rooms. But the subject of lubrication has not yet received its fullest development in the average turnery, and it is certain that a tool the shape of which only approximates to a correct form will perform more duty if abundantly lubricated, than one which is faultless in formation but is insufficiently lubricated. The function of lubrication is to maintain the tool point and the work cool, and allow the chips to slide off easily, and if this is done, the amount of material which can be removed by a single-edged tool is almost incredible to those accustomed to old-fashioned methods of working. The manufacturers of cycle-making machinery have taught engineers lessons in this respect, which they have profited by. To a certain extent this obvious method of increasing efficiency has its applications in the oil pumps and tubing fitted to a certain number of machines, but these must become far more numerous and complete before the best results can be obtained from single-edged tools. The lubrication of the turret lathe shows how much can be done with tools many of which do not satisfy the best theoretical conditions laid down for tool angles. The more nearly lubrication is made to approach that practised on turret work, the more favourable are the results obtained. Not a great deal can be done in this way in the common lathe, a full stream from the drip-can being the best available; and this is one of the limitations to the amount of metal that can be removed, in the case of wrought iron and steel. These furnish another set of conditions outside the recent and phenomenal growth of the rapid steels, which have opened up another vista of possibilities so far as the work of roughing down is considered.

(5.) Heavy cutting cannot be done on a flimsy lathe. Strength and stiffness are necessary in a greater degree than are necessary to withstand breaking stresses. What is essential is that the mass shall be sufficient to absorb vibrations, bending stresses,

and yielding of any parts which would produce slight separation of the tool and the work.

The general turner knows in a practical way all that is worth learning about tools. This knowledge is termed rule-of-thumb, but we are not convinced that anything better is available. Theoretical considerations and experiments do but bear out what the men in the shops have learned by a long experience that develops into something like intuition, or instinct. It seems impossible to lay down any close rules for guidance in grinding angles other than those which are already adopted in the turnery, and those to a large extent are not crystallised rules, since grinding is mostly done by the eye of the workman, assisted by a few simple gauges. This practice is denounced by writers, who say that all grinding should be relegated to the tool room. Doubtless it should be so, and generally is, in those shops where the same class of jobs, and same qualities of metal are repeated with unimportant changes from month to month. But this does not meet the case of the general shops, many of which have no tool rooms; and whether they have or not does not much affect this question, because there is so much variation in the class of jobs done, and in materials, and in other conditions, that it seems undesirable that rigid rules in regard to tool formation should be insisted on in these. And, further, the question may be asked, How are the most suitable angles to be ascertained? This is not a case of standardisation like that of gears, or screws, or pipe flanges, which admit of settlement on a sound workable basis. No one yet has been able to prove that a certain tool angle is the best for all cast iron, another for all forged iron or steel, another for all gun-metal, and suitable alike for all cutting speeds, depths of cut, and feeds. It is impossible that such should be determined, for cast iron is hard, soft, brittle, slippery, and of medium quality; forged metals are soft or tough, harsh or dirty, homogeneous or pinny; gun-metal and brass may signify almost anything in regard to range of hardness. The tool angles most suitable for slogging are not the best for fine finishing, neither is the shape which is suitable for one the best adapted for the other. Now, in the general shop, the turner knows best what tools to pick up out of his box to tackle the various kinds of material he has to handle, ranging through many grades, for roughing and finishing, for slow and fast, for deep

or shallow cutting, and slow or rapid feeds. For these reasons the substitution of a rigid system of tool grinding in shops of this character is a matter of convenience—fitting in with modern ideas of system, rather than of improved efficiencies.

This, however, is not advocating the exercise of no check whatever. The point is that such a check is not required with a staff of experienced and intelligent turners, who take higher rank as mechanics than do those in shops where specialities form the principal product. And though it might be urged that men are not usually disposed to get the very best possible results from tools in regard to speeds and feeds, this does not much affect the question. For even if that is admitted, there are always exceptions to be found among the best mechanics, especially if they are working by the piece, and these set the pace, and afford a fair measure of the maximum duty which is attainable.

Moreover, the question of angles does not stand alone. A manager or foreman of limited experience, especially if the proverbial new broom, is apt to commit the blunder of having machines speeded up without regard to the conditions imposed by the tool angles, and by the nature of the work. The only safe control that can be exercised in the general shop—and the same applies to the specialised one—is to collect data of results in turning certain materials with tools of certain shapes, and then make these results a standard of minimum production for future work of the same kind. Then, if men are found working below that in regard to speeds and amount of reduction of metal per hour or day, the question of tool formation must be looked into and corrected, and things levelled up.

Mr Donaldson instances the case of a shop in which his experiments were put to practical use in the following manner:—

Machine grinding was introduced, and tools of approved angles were prepared to be issued to the men as required. From the data afforded by the experiments, determinations were made for the best speeds for cutting all classes of material in general use, using one-inch diameter as the constant, and the following letters were adopted to indicate the different classes of material:—

S. V. H.	means	Steel very hard.	I. C.	means	Iron cast.
S. H.	,,	Steel hard.	B. H.	,,	Brass hard.
S. M. H.	,,	Steel medium hard.	B. S.	,,	Brass soft.
S. T.	,,	Steel tough.	B. F. H.	,,	Brass forged hard.
S. S.	,,	Steel soft.	B. F. S.	,,	Brass forged soft.
I. W.	,,	Iron wrought.			

A small brass plate was prepared for, and attached to each machine, bearing figures denoting the determinations referred to, and were of the following form :—

Material.	Revolutions for 1-inch diameter.
S. V. H.	58
S. H.	84
S. M. H.	102
S. T.	107
S. S.	105
I. W.	210
I. C.	80
B. H.	468
B. S.	860
B. F. H.	615
B. F. S.	530

The face of each step on the cone pulleys of the lathe was stamped with the number of revolutions the spindle would make when running with single gear, back gear, and triple gear. The workman then divides the number of revolutions for one-inch diameter of the material to be operated upon, by the diameter in inches of the work, which gives the number of revolutions required. The belt is then placed on the step of the cone pulley which gives the required rate.

There is little hand-turning left in the engineers' shops, though, during the writer's apprenticeship there were several lathes where hand work, in which the old heel tool survived, alternated with slide-rest work. At that time small bellied machine handles were commonly done by hand as a boy's job. As a matter of practice a course of hand-turning is very valuable to an apprentice, for points are learned about tools and their angles which cannot be learned so well with self-acting power lathes. A small proportion of hand lathes are now in use, but chiefly for finishing and polishing processes, which can be done as well and quickly as by slide rest. For any important volume of work the hand lathe has disappeared from the modern turnery.

The tools used in turning may be divided into two main classes—roughing and finishing. Each occurs in numerous diverse forms.

The essential requisites in the formation of a metal-turning tool, particularly when used for roughing only, are the possession of as much cutting capacity as is consistent with strength and durability. Such a tool differs widely in form from the wood-turning tools, which are characterised by immensely greater keenness of edge, but far less durability. In fulfilment of these simple requirements the different forms of tools for the cutting of different metals have been developed. In forming tool edges the starting point is properly the angle of clearance—that is, the angle which the front of the tool makes with a tangent to the work on the line of centres (Fig. 6, *c*), and this should always be made as little as convenient in order to leave as much metal as possible available for strength. It is usually given as 3°. From 3° to 5° is good practice, but in tools used for soft wrought iron and for brass the angle is often made considerably larger. Its object is to prevent unnecessary friction between the tool and the work. The angle by which the cutting power of the tool is governed is the top one *b*, and here slight alterations will effect very important differences in results. It will vary from about 30° or 40° with the horizontal for wrought iron and mild steel, to 25° for cast iron; to zero for brass and gun metal. There is no hard-and-fast angle for any one metal, because of the great differences in texture and in hardness, and therefore a greater or a less cutting angle may be employed with advantage on different grades of metal. But the use of tool holders has taught turners this fact—that a constant angle can be economically employed for all cast metals, and another constant angle for all wrought metals.

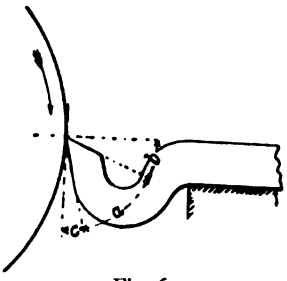

Fig. 6.

This is the basis of the formation of metal-turning tools, however widely their details vary. They are made straightforward; and right and left handed, narrow, and broad at the cutting edges, and they will take the finest and the heaviest cuts.

These are true cutting tools. But on much turned work, and

on all of the finest, tools of another type are used. These are the finishing tools, which are of two main classes—the finishing tools proper, and the spring tools. The latter act by scraping, but the former mostly cut, the angles being identical or nearly so with those of the roughing tools. Often the same tool fulfils both functions. The top or cutting angle is, however, often made rather less for finishing, in order to reduce the risk of the tools being drawn into the work, so causing the action to approximate to that of scraping. The essential difference between the two, however, is this—that the roughing tool mostly effects a deep cut with a fine feed, while the finishing tool always takes a very shallow cut, and a more or less coarse feed. In other respects the finishing tool follows the roughing, being made wide and narrow, right, and left-handed, to suit different kinds of work. The spring tool (Fig. 36, p. 46) is not a true cutting tool, but a scrape. It leaves a fine smooth surface on the work, but not more accurate than that left by the finishing tool. It is not used in all cases, but only for the purpose of imparting good surface finish.

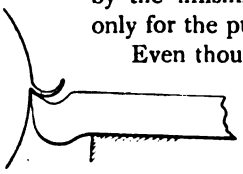

Fig. 7.

Even though a lathe bed be true lineally, and work be chucked properly, untrue work is possible through want of due care in regard to the tools used. Naturally the point of the tool must wear slightly in turning over any considerable length. Partly for this reason, the finishing cut should always be a fine one. The tool should never be taken out for regrinding during the process of a finishing cut. Forcing a tool too hard against light work, or operating a blunt tool, or using tools badly shaped or badly tempered, or permitting slackness in slides, and so on, will each and all cause differences in the sizes of work at different parts of the length.

The tools in Figs. 6 and 7 represent the two broad types for roughing, but the first is not so suitable as the second for the heaviest duty, because of its greater elasticity. The object of cranking a tool for lathe work is to have material for repeated regrindings of the top face, without having to resort to reforging, which involves drawing the temper. In a cranked tool used for planing and shaping, the object is also to avoid risk of the tool digging in. In Fig. 7 the cranking is but slight, in Fig. 8 there is no cranking at all, and these last two are better forms for heavy

work than Fig. 6, each being capable of standing up to maximum duty, supported, as they are, nearly to the cutting edge, the difference being indicated by the shading of the tool rest beneath.

With regard to the forms of tools in plan view, which are most suitable to use for heavy roughing down, undoubtedly the rounded nose (Fig. 8) is to be preferred to a pointed tool, and yet the latter is a good one for deep cutting and fine feeding. But the round nose is capable of fairly deep cutting, combined with coarse feeding, and is employed most frequently in the general turnery.

The tools used in lathe work vary in their cutting angles anywhere between about 45° and 85°, each being an extreme, of course. The standard cutting angles (*a*, Fig. 6), were formerly considered 40° to 55° for wrought iron, 60° to 65° for cast iron, and 80° to 85° for brass and gun metal (Fig. 9). These are still, as of old, safe approximations, or basis angles to go upon; but

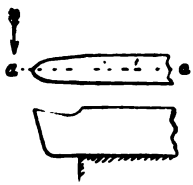

Fig. 8.

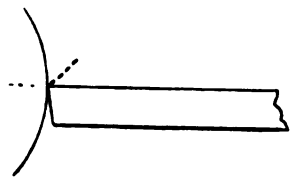

Fig. 9.

the range of each may be often extended considerably with advantage. Thus tough, highly mottled cast iron requires a more obtuse-angled tool than a soft, grey, graphitic iron. A high carbon steel must be cut with a more obtuse tool than a mild quality. And beyond these differences, there is that due to the fibrous or the crystalline quality of the metal. The cuttings from a fibrous metal must come off as shavings (Fig. 7), not as chips; those from a crystalline metal or alloy will come off as chips (Fig. 9). If the fibrous cuttings are broken up into chips, as happens when a tool has little top rake, that increases the duty on the tool, and power is lost in a rise in temperature. Therefore the angle of top rake (*b*, Fig. 6), has to be considered as well as the cutting angle. In some tools, therefore, no provision is required for bending chips; in others there is a large angle of top rake. The long turnings of wrought iron and mild steel curl off unbroken several feet in length down the sloping top face of a

properly formed tool. On the other hand, in turning brass, the cutting takes place in a succession of short independent cuts. To attempt to turn wrought iron with a brass tool would produce wretched results, for the cuttings would not curl off at all, but become broken up, and slide over each other in a crinkled fashion. Again, during cutting, friction between the front of the tool and of the work must be confined to the portion immediately adjacent to the cutting edge, hence the reason for front rake (*c*, Fig. 6). The amount of this is of much less importance than the amount of top rake. I have found it range between 3° and 25° in turning tools in regular use in shops. Between these two angles of top, and front rake, the cutting angle *a* is included.

If a strong cutting angle is wanted with a considerable top rake *b*, then the front clearance angle *c* can be lessened down to

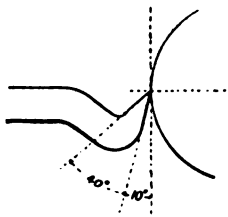

Fig. 10.

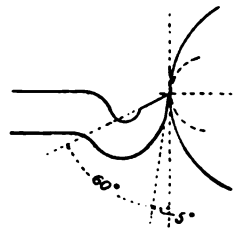

Fig. 11.

3°. There is no special reason why this last should be limited to 3°, but it should not go to the extreme of 25° just now mentioned, because so high an angle permits of more rapid wear of the front edge than is desirable, with no corresponding advantage. But an excess here is less objectionable in soft metal than in hard. It would, for instance, answer for brass, or good soft wrought iron, but not for hard cast iron or hard steel. From 5° to 10° are good angles for front rake for any metals not extremely hard, and in soft metals up to 15° is not detrimental.

Figs. 10 and 11 are drawn from tools cutting respectively good soft wrought iron, and medium cast iron, the first removes shavings, the second short broken chips.

A great deal may be learned of the action of these tools from the common graver (Fig. 12) of the hand turner. According to its method of presentation to the work, it can be used for roughing

(Fig. 13), or finishing (Fig. 14), for turning cast and wrought metals (Fig. 13), and crystalline brass (Fig. 14), since its angle of top rake, and its angle of relief vary with every change of presentation. It is the type of the diamond point (Fig. 15), and though not a slogging tool, like the round nose (Fig. 8), it is capable of removing

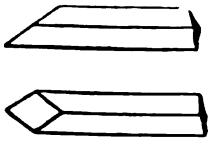

Fig. 12.

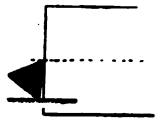

Fig. 13.

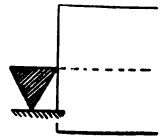

Fig. 14.

fine shavings. The problem of tool angles can be studied in the graver better than in any other single tool.

Angles depend on many matters besides materials, as on the way in which the tool is supported, the depth of cut, the stiffness of the tool, the shape of the cutting edge in plan, &c. A safe rule is, to give as keen an angle as is consistent with permanence of edge, which experience and judgment alone can settle in particular cases. Take the case of front, or bottom rake, which is usually given as of a fixed character, ranging from 3° to 5°, though from 10° to 15° accords more nearly with general lathe practice. It is not difficult to understand the reason of this. A fixed amount of rake must be of an accommodating character, because it has to serve for diameters differing widely, and more important still, for very coarse as well as fine feeds. In the case of diameters, the clearance angle of a rigid tool, that is, one not operated by hand, amounts to considerably more in turning a small than a large diameter. And the clearance suitable for a fine longitudinal feed, at *a*, Fig. 16, would foul in the coarse feed at *b*, while a clearance sufficient for the coarse feed *b* would give an excessive amount for the fine feed *a*. But special cases apart, the same tools have to be used for extreme conditions of feed, fine, coarse, and all intermediate ones.

Fig. 15.

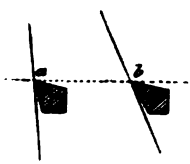

Fig. 16.

The case of tools for cutting screw threads of square sections, and worms, especially those of steep pitches, helps to illustrate

this point. You never hear anything about fixed angles in connection with these, and of the folly of rule of thumb, because the angles of every threading tool have to be made to suit the job, otherwise there would be an inevitable foul.

Fig. 17.

After suitable angles for these tools have been settled, the direction of feeding is found to exercise a modifying influence on the form of the tool, looked at in plan. The objection to the tool shaped as in Fig. 8 is that, being straightforward, it is not properly adapted for feeding transversely, in the direction of the arrow. The reason is, of course, that the angles taken in the longitudinal direction *a a* of such tools are correct only in that plane. In a common brass turning tool like Fig. 9 the same angle can be maintained all round the curve, because it has no top rake. But top rake in a straightforward tool alters the cutting angle away from the centre line, and the greater the angle

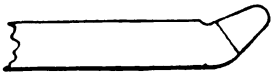

Fig. 18.

Fig. 19.

Fig. 20.

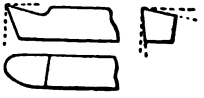

Fig. 21.

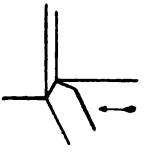

Fig. 22.

of top rake the greater the discrepancy. This is minimised by grinding the sides of the tool as shown by the end view in Fig. 17, which preserves the clearance angle intact all round. If the top face of the tool were ground concave, the cutting angle could also be maintained, but being straight across, the cutting angle is quite lost by the time the curves merge into the straight portion of the bar.

This is the reason why right, and left-handed tools are used, cranked in the direction in which the tools have to be fed, various forms of which are shown in Figs. 18, 19, 20, and 21. Although objections have been made to these, on the ground that the flat

top faces of the tools prevent the perfect maintenance of the cutting angles away from the axis of the cranked portion, this does not carry much weight in practice, for the simple reason that the tool point is not buried so deeply in the work as to bring the extremities of the curved portions into action, and a slight departure from a given angle is not so greatly detrimental as it is often believed to be. It is here, however, that the value of the pointed tool (Figs. 15 and 22) is supposed to come in. In this, one edge with a single angle removes the bulk of the material, the other following and merely severing the chip at its inner edge.

Tools made with side top rake, both right, and left-handed, indicated in Figs. 18, 19, and 21, are the most valuable part of the turner's kit for roughing down. Top rake tends to draw the tool in, which is especially noticeable on brass. But there is no objection to the tool being helped in the direction of its traverse, as this does not include risk of digging in, or hitching in, unless the shank is flimsy, or the overhang too great. The question whether the tools shall cut by straight edges, or be round nosed, is outside this of side top rake.

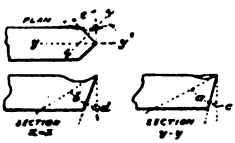

Fig. 23.

Mr H. F. Donaldson, of Woolwich, made a number of experiments on diamond-pointed tools, of the shapes shown in Fig. 23, from which he deduced the limits of cutting angles given in Table I., the wideness of which he remarked "may be considered to almost defeat the attainment of the object in view." But they illustrate the fact how widely tool angles may vary in practice.

TABLE I.—LIMITS OF CUTTING ANGLES.

	Front Cutting. *a*	Side Cutting. *b*	Front Clearance. *c*	Side Clearance. *d*	Horizontal. *e*
For cutting mild steel - -	52 to 60	50 to 60	3 to 8	3 to 8	33 to 43
For cutting medium steel	54 to 63	60 to 65	3 to 8	3 to 8	33 to 43
For cutting hard steel - -	65 to 78	60 to 70	3 to 8	3 to 8	33 to 43
For cutting soft yellow metal - - -	62 to 74	62 to 74	3 to 8	3 to 8	33 to 38
For cutting medium yellow metal - -	62 to 74	70 to 75	3 to 8	3 to 8	33 to 38
For cutting hard yellow metal - - -	60 to 80	60 to 80	3 to 8	3 to 9	33 to 38

Mr Robert Dumas recommends tool shapes like those shown in Fig. 24, A being suitable for very heavy feeds, and shallow cuts; B for fair sized feeds, and deep cuts, with a tool intermediate to these for average conditions. The radius of the nose is made not less than the feed employed, and should be slightly more. For general work, tool B is the more suitable. There is a point about these tools in harmony with one used for high speed cutting, which is, that the cutting edge slopes away from the face being cut. In the ordinary round-nosed tool, with side rake, the opposite condition exists. The result is that if tools are flimsy, or the overhang from the rest is large, the ordinary tool is more likely to dig in than the sloped back form shown in Fig. 24.

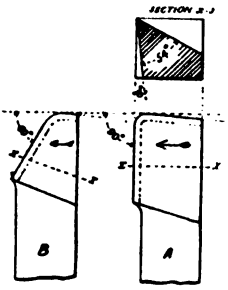

Fig. 24.

For roughing down, either of the types of tools illustrated may

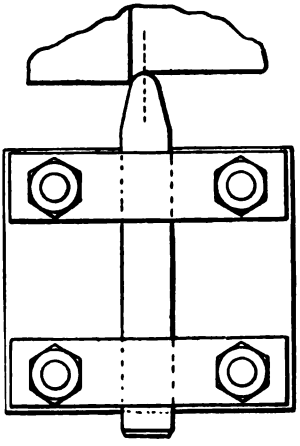
Fig. 25.

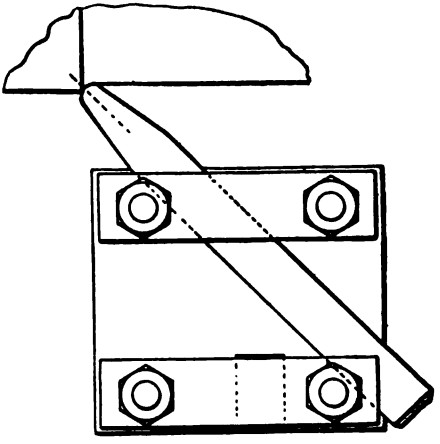
Fig. 26.

be used. The straightforward tool is set as in Fig. 25; better, as in Fig. 26; or the right, and left-handed tools are set as in Fig. 27 and on the opposite hand. There is no difference in the shape of these on the axial dotted line, but the right, and left-

hand tools are turned round to an angle in order to bring the axis of the nose more approximately into line with the direction of traverse of the tool. A modified form of cranked tool is shown in Fig. 28, very stiff, and equally capable of traversing and sur-

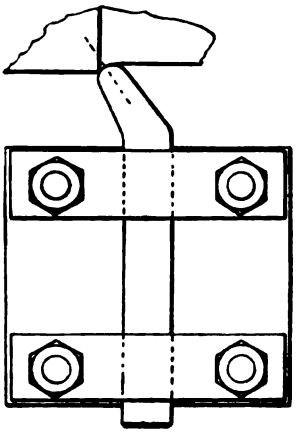

Fig. 27.

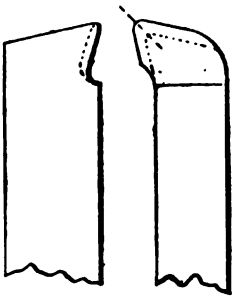

Fig. 28.

facing, approximating in shape to the next one shown—the knife type of tool (Fig. 29), its action being shown in Fig. 30. Though employed originally, and still so, for cutting ends of turned work, hence called a side tool, and used more for finishing than roughing, it is employed to a considerable extent for roughing also, cutting deeply with a fine feed.

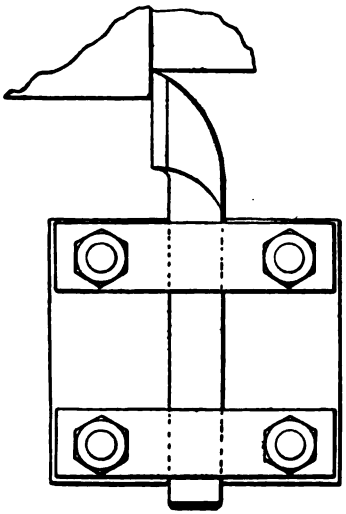

Fig. 29.

In roughing down, tools are used indifferently in either of the positions shown in these figures. The first (Fig. 25), is quite suitable for light skimming of the surface, say to a depth of cut ranging from $\frac{1}{32}$ to $\frac{1}{16}$ in.; but the second and third (Figs. 26 and 27) are better

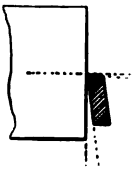

Fig. 30.

adapted for deeper cuts of, say, $\frac{1}{8}$ in. and over, depending on the size of the tool. Thus, while in Fig. 25, the best cutting angle occurs on the dotted line, the deepest penetration takes place at the side of that, where the cutting angle is more obtuse. But both in Figs. 26 and 27 the best cutting angle coincides with the deepest penetration of the tool. The latter, therefore, are the best forms for traverse turning when deep cuts are being taken. But much deeper cuts can be taken with knife-edge tools, as in Fig. 29, remembering that the feeds have to be finer than those which are practicable with the round-nosed tools.

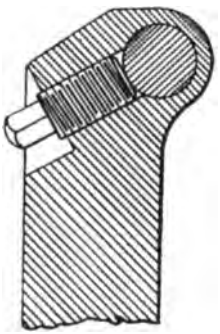

Fig. 31.

The round nose, however, is the ideal roughing tool, notwithstanding the fact that the cutting angles vary constantly from the axis round to the sides. A nearly parallel case is that of the wood-turner's gouge, which can be buried deeply in the work, removing chips much bigger than any which can be taken off with a chisel edge. An excellent, and familiar illustration of the value of a round-nosed tool is afforded by the Smith & Coventry cutters of circular section (Fig. 31) gripped in a tool-holder, and

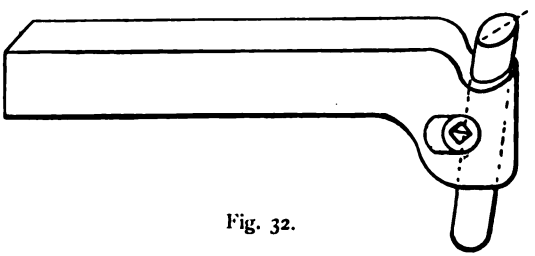

Fig. 32.

ground at an angle, so imparting an elliptical shape to the tool face when looked at in plan (Figs. 32 and 33). These are capital roughing tools, though not in theory perfect embodiments of correct tool angles. In these the holders are made right, and left-handed (Fig. 33), so bringing the axis of the tool in the line of deepest cutting, and largely minimising the effect of alteration

in cutting angle round the curve—that is, the deepest cutting occurs where the cutting angle and the angle of top rake are correct. Cutting terminates where neither angle is correct, but still being at a considerable distance from the location where the top face becomes normal to the axis of the work, and where scraping would take place.

A special advantage of having deeply-cranked tools comes in when deep turning has to be done—up against shoulders and collars. With shallow shoulders the ordinary straightforward tools, set straightforward and to right and left, are suitable enough. One advantage of using knife-edged tools is that the cut can be taken right into a square shoulder, without changing from round to square. If a round nose is used for roughing these, the finishing has to be done with a square-edged tool.

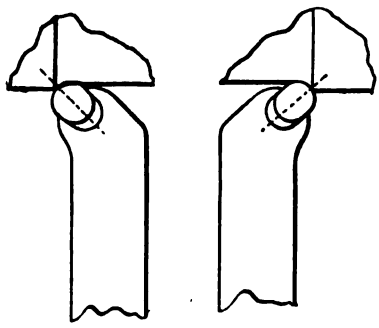

Fig. 33.

In turning cylindrical work, the roughing and finishing cuts are done either with the same, or with separate tools, depending on the degree of finish which is wanted, and partly on the nature of the material being turned. The difference between roughing, and finishing is often only one of relative depth of cut, and feed, and not of the shape of the tool. The same tool will do for roughing, by taking a deep cut, and a fine traverse feed; and for finishing, by taking a very shallow cut, and a coarse feed. The advantage, however, which a broad finishing tool like Fig. 34 has over a narrow-pointed roughing one, is that the breadth of its cutting edge permits of a broader feed than the narrow edge of the roughing tool. But roughing tools when used for both purposes—which is often desirable to avoid changing tools on a single job—are frequently flattened a little at the edge, instead of being left rather pointed or quite semicircular.

Fig. 34.

When these tools are not employed for finishing, one of the

broad tools in Fig. 35 is used, or else the spring tool (Fig. 36). The value of either of these lies in the width of cutting face, which permits of a coarse traverse. Generally, too, the angle of top rake is much less than that in roughing tools, approaching nearly to the horizontal, or else quite normal to the work, as in the two left-hand figures. The corners are slightly rounded to prevent them from digging into the surface being cut.

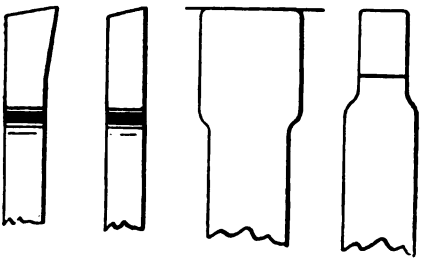

Fig. 35.

The spring tool is not one which can be relied on to produce close accuracy, its value lying in the fine finish which it produces on the surface. It is not used so often as formerly. The spring tool, or any tool with much elasticity, is quite unsuitable for even moderate duty. A common finishing tool, supported close to the work, gives more accurate results. But in any case truth is best obtained by making the finishing cut as fine as possible. A tool also cuts cleaner if it is touched over with a hone after grinding. The spring of a cranked tool is often taken out, or nearly so, by inserting a bit of wood in the space A.

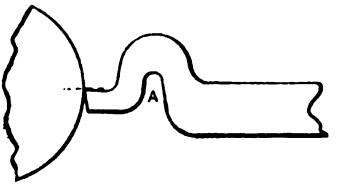

Fig. 36.

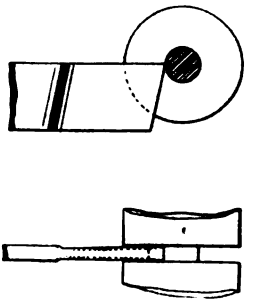

Fig. 37.

The parting tool (Fig. 37), is used both for roughing and finishing. No top rake is shown in the Fig. Sometimes a very slight amount is imparted, but never more than 3° or 4°. The tool has but one function, that of parting off work perpendicularly.

To prevent excessive friction of the sides with the surfaces being cut, clearances are imparted by narrowing the tool back from the edge. The uses of such a tool are not fully denoted by the term parting. Its principal function is setting in ends, or otherwise effecting the bulk of the separation between adjacent pieces after they have been turned. But in shouldering and stepping down, the parting tool is often used at the commencement, being set in at once at a definite length to the diameter required. The tool is especially liable to chatter, and for this reason it is made deep —often deeper than the shank—to compensate somewhat for its narrowness, and either very little top rake is given, or none at all. Though the tool is narrow, its shank is made as large as the shanks of the roughing and finishing tools. It is kept in numerous widths. If a parting tool is allowed to become dull, it will not work properly, although a similar amount of dulness on a traversing tool would not be noticed. The reason is that the tool has to penetrate straight into the work, without any relief afforded by side traversing, and therefore if slightly dulled it will refuse to cut for a few moments, and then when still fed in will suddenly "bite" and dig in badly. For the same reason it is imperative to have the cutting edge at the exact height of the lathe centres.

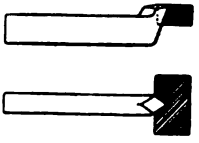

Fig. 38.

Fig. 38 shows a cast-iron tool, of diamond-point shape. These have long been used to a limited extent. The shaded sections indicate the chill, against which the necessary hardness is imparted to the cast-iron tool.

Around these broad types many other tool shapes are developed, most of which are shown in subsequent chapters among the illustrations of work done. They include square-nosed tools for cutting into shoulders, round-nosed tools, for finishing internal radii, radius tools for convex corners, shouldering tools in which a radius is combined with straight edges, internal tools for recesses, and nearly all forms are made right, and left-handed, as well as straightforward, and many of these, especially the round noses, and the radius tools are scrapes, being used mainly or entirely for finishing operations.

An important matter in setting tools is to have the cutting edge at exactly the same height as the centres of the lathe. This is of greater importance as the diameter of the work is lessened.

The reason is that tool angles remain constant only so long as the above-named condition is observed. If the tool comes below, the action tends to scraping; if above, to chattering and rubbing against the face of the tool. On larger work this is not so noticeable, but on pieces of very small diameter it becomes increasingly difficult to make the tools cut at all, and if they start they generally jerk the piece out of the centres.

CHAPTER III.

Remarks on Turning in General.

Sources of Error—Want of Truth in Lathes—Parallelism—Linear Truth—Alignment—Surfaced Work—Circular Truth—Methods of Chucking—Between Centres—On Face Plates and Chucks—Tentative Methods of Chucking—Wear of Centres—Spring—Holding up to Dimensions—Methods of Straightening Bars—Hammer Straightening—Straightening Machines—The Chalk Test—Shouldered Work—Roughing—Parallel Pieces—Cylindrical Pieces—Finishing—Growing Economical Value of Rough Turning.

IN this chapter, we briefly consider the causes that conduce to good and bad turning—due to the lathe, to methods of chucking, and to the tools used.

The work of operating a self-acting lathe of any kind would seem to many a task of a simple character, and turned work should presumably be most accurate. If such were the case, good turners would not command high wages, neither would their work have to be supplemented, as it often has, by grinding.

The reason why turned work is liable to error are (*A*) the want of truth in the lathes themselves, and (*B*) the lack of exercise of sufficient carefulness in turning.

In reference first to (*A*): A lathe ought to be true. A well-made lathe is so when first manufactured—as true as handicraft can make it. But a very little wear suffices to destroy its absolute accuracy, notwithstanding that it needs must continue in service for many years. All that can be done to delay and minimise the evil of unequal wear is done, by the adoption of broad surfaces, scraped fits, setting-up strips, grinding mandrels to fit, the use of tough metal, and so on. It is still further delayed by care in use, as by keeping wearing surfaces lubricated, free from grit, and by employing lathes for such classes of work as tend to equable and legitimate wear only. And by the observation of these pre-

cautions, work as it leaves the lathe is practically true enough for nine-tenths of engineers' work.

Inaccuracy in plain turning (*B*) is due either (1) to want of linear truth and parallelism, (2) to departure from a true plane in surfaced work, and to (3) departure from the circular form.

In reference first (1) to want of parallelism: This may be due (*a*) to the springing of the work, or (*b*) to absence of linear truth in the ways of the bed, or (*c*) to lack of alignment in the fast and loose headstocks. The first (*a*) is obviated in three ways: By straightening the work before it is put into the lathe in order to remove metal equally; by taking a rough cut, or cuts before taking the finishing cut, a precaution which is the more necessary in long slender work, that will frequently spring and alter its form on the removal of the outer scale and fibres; by supporting the work near the tool by means of a travelling or a following steady. The second—(*b*) absence of linear truth in the bed—can be guarded against by preserving the ways good as long as possible. If the carriage fits tightly near the end, and slack near the headstock, absolutely true results are not possible, and this must be borne in mind when selecting work to be sent to a lathe.

The third—(*c*) lack of alignment—cannot be corrected as regards the loose headstock which slides between the ways by close-fitting tenons, but the fast headstock can be moved across in most lathes by means of its adjusting screws. The alignment or otherwise of the head, is tested by turning one end of a bar between centres, and then without moving the tool in the radial direction, sliding the rest down to the other poppet and turning the bar end for end. If the tool then touches the turned end, the ends are in alignment.

In reference (2) to the departure from a true plane in surfaced work: This is dependent on the true setting of the cross slide of the rest, and the fitting can be readily corrected, if found necessary, by the file and scrape, and setting-up strip. The truth of the cross slide is tested by trying a tool point held in the rest on opposite sides of a large face plate which is known to run truly.

The departure from the circular form (3) may be produced by many causes, as bad tool formation, too hard duty imposed upon the tools, dulness of edge, bad fitting of the lathe in its mandrel and its slides, by absence of support to the work when of slender proportions, causing eccentric movement of the work and chatter

between it and the tools. Inaccurate and badly-finished surfaces are often doctored by the file and emery, but that is not turning, nor are the results accurate.

The methods of chucking lathe work differ so essentially in the case of jobs of different kinds, that no very precise rules can be laid down for guidance. Substantially the methods in general use may be summarised as follows:—

Pieces of work which are long relatively to diameter are held between the centres, and revolved by a driver. Or they are held between and driven by the jaws of a face plate, and pivoted on the back centre. Or, if they have to be bored, they are gripped and revolved at the face plate, and in a cone plate, or in some cases in a steady rest at the opposite end. If the piece of work is a hollow cylinder which has to be turned, and not bored, then it may be pivoted at the back poppet upon a bar made to bridge its mouth at that end. Or it may be held on cone centres. Or, in the hollow mandrel lathe, a long bar is gripped in the headstock only, and the bar is projected through as the required articles, such as pins, studs, or screws, are turned and cut off it. Such work is in many cases pivoted on the back centre also.

Pieces of work which are short relatively to diameter are gripped only at the fast headstock end, in the slotted face plate by means of bolts or clamps of various forms; or to a dog chuck by means of the sliding screw dogs; or in self-centring chucks. Work is thus chucked when its length or overhang is not sufficient to cause unsteadiness during turning. It can be clipped centrally, or eccentrically, and can be turned, surfaced, and bored. Work need not be circular in order to be so chucked, but many irregular castings and forgings are gripped thus for the facing, turning, and boring of certain portions of them. Many cases, however, occur in which pieces do not present faces suitable for bolting or gripping direct to a face plate, and then an angle plate, or L-shaped chuck, affords a convenient means of fastening. It is especially convenient, too, when faces or circular portions have to be tooled at precise right angles with others then attached to one face of the angle plate.

Most ordinary work is chucked in a tentative fashion, effected first by the eye, or by a rough setting to lines; and then being run round, a chalk mark indicates the most eccentric portion, by which mark readjustment is made, the operation being repeated

as often as necessary. If external faces or edges are not available, then a circle struck on the work, or a centre merely, is used as a test of accuracy. The exceptions to this tentative method are, that of work held in self-centring chucks, which include those with dogs, and the smaller split chucks used with hollow mandrel lathes, and work which is attached to special appliances, as angle plates, or other rigs-up specially designed for repetitive work.

Inaccuracy in turned work may be due to faults in chucking. This may occur in work run between centres, as well as in that gripped in chucks.

In reference to the first: It is possible for it to run truly at an early stage of turning, and out of truth after, due to unequal wear of the conical holes into which the centres enter. These holes are often, in light work, merely made with a centre punch. But the proper method, and one which must be followed in heavy jobs, is to drill holes first a little way inwards and countersink them. But work which is chucked on the face plate, or dog chuck is most liable to become out of truth, being distorted by careless clamping. The lighter the work, the more liable is this to occur, and it is often therefore necessary to use various packings, and supports to oppose the tendency to distortion. Both flat pieces and light circular work are liable to these risks, and much of a turner's art consists in guarding against them without an undue expenditure of time. To chuck some jobs lightly yet efficiently, often taxes a man's ingenuity.

In taking plain pieces of work to rough down, the method of operation is controlled by several things, such as whether the work is full or bare in dimensions, parallel or shouldered, stiff or slender.

The difference between having sufficient and insufficient metal to turn off may easily make 100 per cent. difference in the time occupied on a job, the latter condition sometimes requiring several tentative centrings before the work can be carried through, and more care is required in straightening than as though the allowances were ample. Parallel, and shouldered pieces require different settings of the tools, and a large amount of shouldering adds greatly to the time occupied.

Often when bars have been straightened by reference to the eye cast along them, or by the straight-edge test, or on a table or bed, they are found to run slightly out of truth when tested in the

lathe. Then if the allowance is too slight to permit the work to hold up to finished size, the bar may have to be re-centred, or straightened. It is re-centred by throwing over the centre slightly, using a centre punch as a kind of drift, and finishing with a square centre or countersink. But generally the bar is straightened lengthwise by prising it with a lever on the lathe rest, or by taking it out of the lathe and striking it with a sledge, or pening it with a hand hammer. Leverage is the readiest device to adopt, only it is a clumsy and bad practice to do it in a good lathe, although it is a common sight in many shops. A bar-straightening machine is the proper thing to use, and these should find a place in every shop.

The objection to hammer straightening is that it compresses the metal locally, and that when the skin is removed by a rough cut, the bar is very liable to spring back in whole or part. Bending does not squeeze the fibres, but operates over a considerable area, extending their bundles bodily. Some amount of spring occurs, but this happens at the time of bending. The amount of bending done must be in excess of that actually required, in order to permit of the bar returning into a straight condition.

One of the best types of bar-straightening machines is that shown by the illustration on the next page (Fig. 39), which is made to bolt to a bench. It combines a pair of centres A on which the work is held and revolved by hand to test it, and three blocks B, B, and C, between which it is straightened. The centres and the two lower supporting blocks B are both adjustable lengthwise to suit bars of different lengths and having different locations of kinks. The bending is effected by screw pressure above, a square-threaded screw actuating the block C. The capacity of this machine suits comparatively light bars up to $1\frac{3}{4}$ in. diameter. Another machine, of similar design, is made to be bolted to a bench or to stand on a floor bracket. The principal difference is that a prismatic bar is used to carry the centring heads, which is a better job than the round rod with spline in the previous machine. In using these machines, the centres are adjusted to suit the length of work in hand. The bar is placed between the centres and revolved, and the high spots touched with chalk; the bar is then removed from the centres and laid on the vee blocks and straightened as required.

For heavy shafts another type is made in which the straighten-

ing ram is actuated by hydraulic power. It comprises two end straps, within which and a bottom ram the shaft is squeezed. The machine may be slung on the carriage of the lathe, being lifted by a bar passed through eyes in the top of the end straps. The lever for operating the ram stands out in front. Shafts up to 5 or 6 in. can be straightened in this type of machine.

A neat machine is made by the Niles Company to run on the ways of beds with American vees, the wheels fitting over these and keeping the machine on the bed. The shaft remains in the lathe centres while being straightened, and has not to

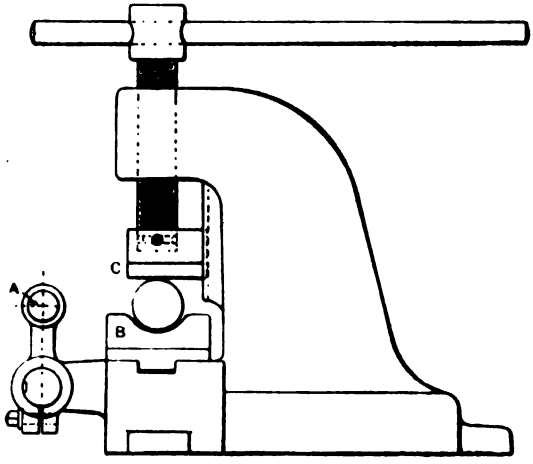

Fig. 39.

be shifted for the purpose of rotating it to find the kinks. The straightening screw is turned by a lever actuating two spur wheels to gain power. Spring of the overhanging bracket which carries the screw is prevented by a big tie bolt with a tee head passing from the bracket to the main frame below.

In testing bars, shafts, and spindles, the old-fashioned method of rotating the object by hand, and holding a bit of chalk on the rest to just touch the full portions, is practically as good as using an indicator in rough—*i.e.*, unturned—bars. The chalk shows up on the black bars, and remains to indicate where the pressure must be given. Even if an indicator is employed, marking must

be done separately, so that no time is saved. The case is very different from the delicate testing of finished work, for which the indicator must be used.

When work is shouldered in the rough forging, this may complicate the work of centring and straightening, as when some sections come eccentrically in relation to others. This often happens in heavy smith's work, done with or without the aid of dies or swage blocks under the hammer simply, in which case portions will be out of round as well as non-concentric. Here the straightening machine may be of no help unless the work can be bent sufficiently to bring all parts right, which is not often the case. Generally this is a job for the marking-off table, the piece being raised on vee blocks, the minimum allowances on opposite sides of the eccentric parts being ascertained by the surface gauge, and end centres then located on the basis of an average for all the parts that have to be turned. Then the result will be the removal of perhaps $\frac{1}{4}$ in. or $\frac{3}{8}$ in. from some parts, and $\frac{1}{16}$ in. or $\frac{1}{32}$ in. only from others. In some cases even this averaging fails, and the work has to be sent back to the smithy to be corrected, or alterations made in some dimensions.

It is a good plan to rough out the whole surface of a piece of work before finishing any portion—good, because first it requires no changes in the tools, but chiefly because the removal of the skin often causes warping and flexure to a slight extent, and this should be allowed to develop before any finishing is attempted.

Also, when taking a roughing traverse it is better, when possible, to remove the bulk of the metal at once, leaving a small quantity only for the finishing cut.

The latter should never be a coarse one; the former may be as coarse as the lathe, the tools, and the work will stand. There is, then, scarcely a limit to the depth that can be removed, because the feed can be lessened as depth is increased, which is the proper method of roughing down.

A plan that is frequently adopted when a large number of similar pieces have to be turned is to rough them all out first, change the tool, and then finish the lot. This is the most expeditious method in such a case.

The turning of a parallel piece should be carried through without stopping the lathe or shifting the tool. If the latter is dull, it should be ground before commencing the cut, and not

afterwards. The first cut must be taken well below the skin to avoid contact with hard scale; and once started thus, the surface will not afterwards come into contact with the efficient portion of the tool edge.

Cylindrical pieces are turned in self-acting lathes by setting the radial position of the tool tentatively first, usually taking a setting-in cut, measuring the diameter that results, and effecting such alteration by the cross-feed screw as will give the diameter wanted for the roughing cut. A rough setting can also be obtained by direct measurement from the lathe centre, or from the diameter of the poppet barrel; but generally the rough bar is measured, a cut set in at a guess, and the size measured again until the proper diameter is obtained, at which the rest remains set for the traverse. If a lathe has a divided boss to the cross-feed screw, exact minute adjustments can be made after the first cut. But practically the calipers or gauges tried on work in the course of reduction are the methods by which diameters are determined and checked.

Before attempting to finish a piece of parallel work, a man should be familiar with the lathe on which he is working, otherwise the shaft may come out too small or too large at one end. If the lathe is found not to turn parallel on setting in a cut at each end, with the tool remaining gripped in one radial position, the headstock or poppet should be looked to and adjusted.

It is a common practice to finish lathe work with a file and with emery. The file is used either to reduce dimensions very slightly, as when making last adjustments of a shaft or spindle with its bearing or boss, or to a ring gauge; or for taking out the tool marks left on work. It does not seem a very mechanical procedure in either case, and such a method has no place in a perfectly interchangeable system. But all the same, it is constantly practised in the general shops, and is unavoidable in average lathe work. Moreover, it gives good results in the hands of careful men. In using the file thus it is employed as in vice work, being traversed crossways and diagonally slowly, the work revolving at a moderate speed. The abuse of this method of finishing comes in when a considerable quantity of material is removed thus, instead of making the lathe finish the diameter as nearly as possible. The use of the file overmuch is bound to produce badly shaped work, which is neither round nor straight. The

emery cloth often follows after the file, for polishing only. To this there is no objection when it is held flat on a stick.

Rough turning is assuming a greater economical importance in the shops since the introduction of the high-speed steels, to which the increasing use of circular grinding machines is also contributory. When work has to be wholly finished in the lathe, care has to be taken to prevent spring, which if once set up, cannot easily be taken out by broad finishing tools. But if work has to go to the grinder it is a matter of comparative indifference how it is roughed down, because the grinder is capable of readily truing up pieces that run out of truth. Another way in which economies can be effected, is in giving the work of roughing down to second-rate low paid men, who are machine minders, and not skilled turners. Any one can rough down within say $\frac{1}{64}$ in. or $\frac{1}{32}$ in., but to finish pieces to fine dimensions in the common lathe requires the skill of the turner.

SECTION II.

TURNING BETWEEN CENTRES.

CHAPTER IV.

CENTRING AND DRIVING.

Point Centres—Necessity for Hardening—Centre Grinding—Attachments—Angles of Centres—Shank Fittings—Morse Tapers—Methods of Finding Centres—by Calipers, Gauges, &c.—Making Centres—Punching—Bell Punch—Drilling and Countersinking—in the Lathe—Forms of Centres—Countersinking—Square Centre—Other Centring Tools—Ends of Bars—Cutting-off Machines—Lubrication of Centres—Leaving Centres in—Carrier and Driver—Various Forms of.

THE work of turning between centres is the branch which it seems natural to take up first in order. It is the primitive branch also, for turning on dead centres has been practised for centuries past.

The difference between driving wood, and metal between centres is due to the relative softness, and hardness of the two classes of materials. A fork or prong chuck can be put into the first, and makes a most efficient driver. Point centres must be used on metal, which involves the employment of a carrier, or driver of some kind, without which it could not be revolved. Even to those who have grown accustomed to lathe work it is often a matter of surprise to see masses weighing several hundred-weights, or tons, being supported securely on two little centres, under the stress of heavy turning.

It is usual to leave the headstock centre unhardened, and to harden that in the poppet only, which properly entails grinding the latter, this being best done by inserting it in the headstock spindle hole, and using a grinding attachment. There are several

little machines designed for centre grinding, but many shops manage to do without them yet. In the majority of cases in the average machine shop a centre grinder is unknown. When a centre wears it is taken to the fire, annealed, re-turned up in place, and then hardened, with the risk of slight distortion and of some waste of time.

Frequently centres are not hardened, in which case they are turned truly, and finished with a scraping tool. The use of a file is not to be recommended, as it leaves a slight roughness on the surface, which is detrimental to good work. In turning up a centre, the difference in cutting speed at the point, and at the base of the cone is rather wide, which is another objection to truing centres by turning. Two examples of centre-grinding attachments are given.

A centre grinder by Leland & Faulconer is illustrated in Fig. 40, which shows the apparatus mounted on the lathe. The tail A is first placed on the slide rest, and the body is then set between centres by means of the two centre holes B, B, in the apparatus, after which the tail A can be tightened upon the rest. The back poppet being next withdrawn to the rear, and the saddle of the lathe moved to the right, so as to disengage the appliance from the running centre, the emery wheel M is then brought up to the centre by the aid of the cross slide, which serves also to feed the wheel as the point is ground. The emery wheel M is driven from the largest belt cone of the lathe by means of the rubber friction wheel D,—by a universal joint, and an arrangement of gearing enclosed in the casing. The wheel D is maintained in contact with the cone by means of a lever C, upon which it is regulated and clamped by means of the support F. The to-and-fro motion of the emery wheel is imparted to it by means of the knob E, which by means of the small rod passing through the main spindle controls the wheel. The back centre is trued up by mounting it in the headstock mandrel for the purpose, in place of the running centre.

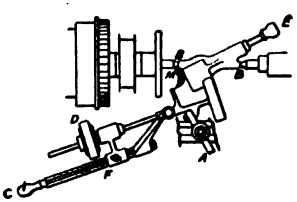

Fig. 40.

A useful centre is that shown in Fig. 41. A shank A, like that of a lathe tool, is forked out into two bearings, and a bearing

boss B is raised upon a stem from the top of the frame. At the upper end of this boss is a bearing, carrying a shaft, which has a hand wheel at one end (the outer), and a belt pulley at the other. The revolution of the hand wheel turns the pulley. The latter drives down to the emery wheel pulley, of small size, to get a decent rate of speed. As a traversing motion must be given to the emery wheel to travel along the centre being ground, the device shown is adopted. A central spindle, seen dotted, carries two bushes C, C, which are free to slide longitudinally in the holes in the main frame, but are prevented from turning by small grooves, cut as shown, into which the ends of screws project, and permit sliding motion only. To effect this sliding, the knob D is placed at the end of the spindle and secured thereon with a nut. The shoulder here and at the ends of the bushes C keep the latter in place. The wheel spindle is really a sleeve E formed of the pulley itself, prolonged and shouldered to hold the emery wheel, its two washers, and circular retaining nut. All this runs as one piece upon the central spindle. By grasping the knob D, therefore, and pushing it to and fro in line with its spindle, the entire concern—bushes, pulley, and wheel—slide while the grinding is going on. The length of the pulley E is sufficient to allow the belt to drive at any position of the stroke. A small screw in the pulley is removed for oiling purposes. The shank of the machine is so bent that when clamped on the rest at right angles to the lathe spindle the angle of the emery-wheel spindle is correct to grind the centres to 60°. Of course, the machine is not designed to remove a quantity of material, but simply to take a series of light cuts

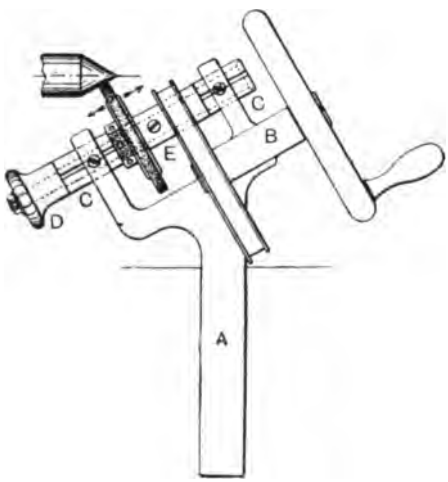

Fig. 41.

to true up centres. The latter must first be turned up to correct angle and hardened, and then the machine is brought into use to correct the effects of distortion in hardening. It is also used at intervals afterwards to keep the centres up to perfect accuracy. The poppet centre is ground by inserting it in the headstock hole for the purpose.

There are several centre grinders now on the market which are driven electrically, and this is a very convenient mode of getting the motion of the emery wheel.

Though 60° is the standard angle for centres, Continental practice has long favoured 90°, or others of nearly the same bluntness of angle. But that it is not essential, even in the heaviest work that has to be carried, may be seen daily in our turneries. This fact was, perhaps, never more strikingly exemplified than in the Pond lathe, built for the Waterlivet Arsenal for turning 16-in. guns, the weight of which is 142 tons. Here the centres, measuring $6\frac{1}{8}$ in. diameter, are of 60° angle. A 90° centre impresses one with a sense of clumsiness. It hardly seems like a centre, but a blunt object on which the work is liable to get out of truth and wobble. The standard angle of 60° is increased in some exceptional cases with the idea that for very heavy work a blunter angle affords a more secure hold. This practice has been more common in the past than it is now. The arguments in its favour are, that the mass of the work is supported more securely, there is less wear on the centre, and that it is rather less liable to heat. Centres of lower angle than 60° are suitable for light work, but are seldom made. Occasional or isolated practice has favoured centres also of about 75°.

The tendency is for centres to become more blunt with service, unless regrinding to gauge is insisted on. They wear more near the point than elsewhere, and if reground there, without taking an equivalent amount off towards the base, the angle will grow more obtuse in the course of time.

Centres are fitted to headstock and poppet by conical shanks, generally made to standard tapers, a detail which is perhaps of less importance in lathes, than in drilling, milling, and other machines. It would not answer to fit centres with screws as in wood-turners' lathes, because they could not be depended on to retain concentric truth. The friction of the conical fitting retains them in place, and they need a little force to push them

out. This is best applied by the pressure of the screw in the loose poppet (Fig. 42), and by a spanner or other device applied to that in the fast head. The common plan is to have two flats F on the parallel portion of the centre, to be gripped by a spanner

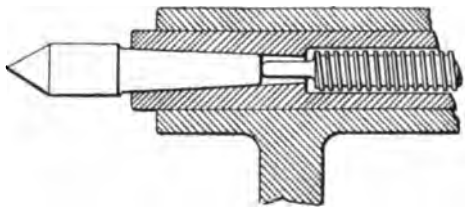

Fig. 42.

(Fig. 43). In the case of a hollow mandrel lathe, a long rod is passed through from the back, and the centre gently bumped out.

The present tendency being towards standardisation, lathe shanks might be brought under this system. The Morse standard is now well known, but is not employed universally. It would render centres interchangeable on lathes of the same size, save

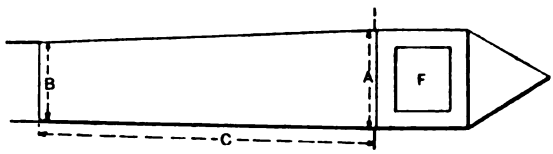

Fig. 43.

time and worry, and simplify the work of the tool room, and centres storage. The usual English practice gives shorter shanks than the Morse standard, but there is no English standard in existence. The Morse tapers, as given by the Morse Company, range from Nos. 1 to 6, to the sizes in the table annexed, and in Fig. 43.

TABLE II.

No. of Taper.	Diameter at End of Socket. A.	Diameter of Shank at Small End. B.	Standard Shank Length. C.
	In.	In.	In.
1	0.475	0.369	$2\frac{1}{8}$
2	0.700	0.572	$2\frac{9}{16}$
3	0.938	0.778	$3\frac{7}{16}$
4	1.231	1.020	$4\frac{1}{8}$
5	1.748	1.475	$5\frac{3}{16}$
6	2.494	2.116	$7\frac{1}{4}$

In a decently made lathe the shanks should be ground and fitted in a reamered hole, or, better still, the hole should be ground out also while revolving in its own bearings.

Preliminary centring is done in various ways. The appliances used include compass calipers, centre squares, and surface gauges, or scribing blocks. Each is more suitable than the others in certain cases. Or, in the case of true, or nearly true bars, no appliance is necessary for obtaining the centre, but it may be located at once by a bell centre punch, or the centre may be found, and drilled simultaneously while running the work in the lathe. These methods are familiar, but it will be as well to point out their special utilities.

The compass caliper, the surface gauge, and the centre square are of most value in pieces that are considerably out of truth circularly. They are not of economical value in handling plain round bars that are true, or nearly so. In using the compass caliper, the bent, or caliper leg is brought up against the edge of the bar in three or four successive and equidistant positions, and short lines are scribed on the end with the compass leg, the mean of the marks being the centre. In using the surface gauge, the bar is laid horizontally on blocking in three or four successive positions, and marks scribed on the end as before. The centre gauge is used to mark radial lines on the end, the stock being laid against the outside, the intersections of the radial lines giving the centre.

Centres are made in the ends of work in two or three different ways. In the smallest, they are frequently centre-punched, half-a-dozen blows or so on the punch being sufficient to produce a

centre deep enough to carry the work. A special bell centre punch (Fig. 44), well known for many years, is employed also; its object is to indicate the exact centre of a bar automatically, the inside of the bell fitting over the edges of the end of the bar, and the punch, which always remains in the centre of the cone, will mark the centre at once. The punch is struck just sufficiently to mark the end, a common centre punch being then used to enlarge the centre. The bell punch is not suitable for bars very much out of truth, but may be used with advantage on those of regular shapes, as square, hexagon, octagon, &c.

Centring with the punch alone is objectionable, except in the very lightest pieces, because the end of the cone so produced is bound to be left slightly blunted, and this will blunt the lathe centre. To avoid this, two punches may be used, one having the standard angle of 60°, and the other 55° or 50° for bottoming. But centre drilling is preferable, being more efficient, and practically as quick if done properly.

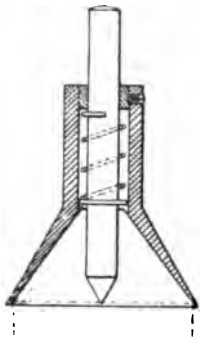

Fig. 44.

The centre punch, however, is useful even when work is to be drilled and countersunk, being employed for tentative centring. Thus, after centres have been obtained approximately by centre square, or scribing block, or calipers, centres are popped in the ends, the work just pivoted on these, run round by hand in the lathe, and tested by chalk, or by a scriber point held in the rest. If incorrect, the centre pops are corrected by driving them afresh in the direction desired. When the centring is found to be true, the holes can be drilled and countersunk.

The old fiddle drill was formerly very commonly employed for centring. Later came the brace drill, operated by a handle and bevel wheels, a tool still employed extensively in the general shops. Work is also run in the lathe, both to make, and to countersink centres already drilled. One plan is to drill the centre hole, and simply put the work in the lathe to form the countersink. Another is to drill, and countersink at once. The latter saves a good deal of time, and ensures the countersink and small hole being concentric, and in line with each other; but the first-named is suitable enough for the treatment of odd jobs.

With regard to the first method, a bar, straight or bent, as in Fig 45, or a forked bar (Fig. 46), is used to bring and keep the work in a central position while the countersink is being made with the square centre. The bar or fork is gripped in the slide rest, and gradually pressed against the work until it rotates circularly, and then the square centre is fed in. The latter is

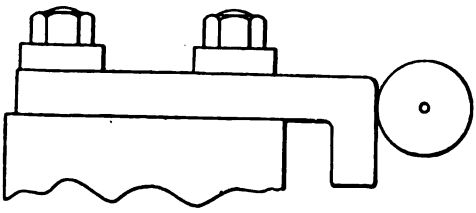

Fig. 45.

inserted in the poppet spindle, the round centre being removed for the time being. The other end of the bar being already drilled, can be held in the live centre, and rotated with the carrier and driver. A quicker device is to use a self-centring chuck, or a dog chuck. But if several pieces have to be centred, a conical cup piece is more suitable, both centring and driving the bar readily. This piece can be gripped in a jaw chuck.

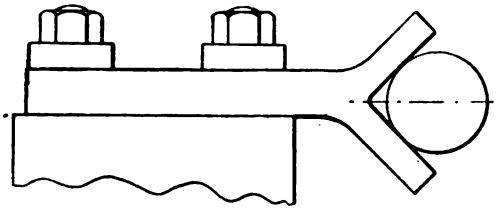

Fig. 46.

But where large quantities of similar bars have to be centred they are done on a centring machine, which finds the centre, and drills and countersinks it—preferably performing the two operations in one drilling. One machine will keep a whole shop of turners supplied with bars.

The hole is drilled deeper than the countersink (Fig. 47) for two reasons. The principal one is to prevent the bottom of

the hole—if countersunk simply, as when centre punched—from abrading the point of the lathe centre. The minor reason is that a small portion of the lubricant is retained in the hole, so that oiling or greasing is required less often than if the hole were not there. Should the countersink in the work wear excessively, as in brass, it is more likely to wear truly with a drilled hole, than without.

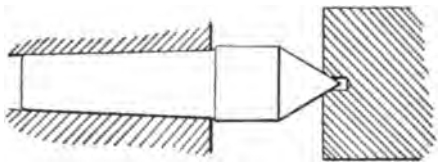

Fig. 47.

It is important that the angle of the holes countersunk in the ends of work should be exactly the same as that of the lathe centres. Any departure therefrom soon causes grooving of the centre. Of the two evils it is perhaps better that the work should run away from, rather than near, the point. But both are bad, as an incautious turner soon discovers. If less, or greater, the centre will be subject to friction over a portion of its surface instead of all over alike.

The square centre (Fig. 48) is used to a large extent in shops for countersinking work in the lathe. It is not an ideal tool, because its edges are not true cutting edges, but scrapes only.

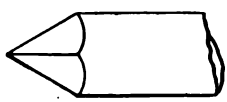

Fig. 48.

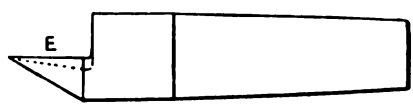

Fig. 49.

But the same might be said against the old-fashioned drill, which nevertheless has been a good servant. If the centre is kept well ground, it will do its work properly, and especially in rough-cut bars, the ends of which might damage more delicate cutting instruments. The taper of the square centre must be kept constant by gauge when regrinding, otherwise the holes countersunk by it will not fit the lathe centre.

A good form of countersink is of circular shape, with a portion cut away (Fig. 49) in a fashion which resembles the cutting of

the D-bit. In a modified form of this, the cutting edge E is sloped upwards at a slight angle, to produce a shearing cut, which is rather less likely to cause chatter than the other.

The place of the square centre, and the countersink is often taken by improved forms which combine drill and countersink in one. Fig. 50 shows a form that is common, the flat shape of which, and plain ground edges are readily kept in working order by regrinding the edges. This tool, however, answers better in brass than in tough iron and steel.

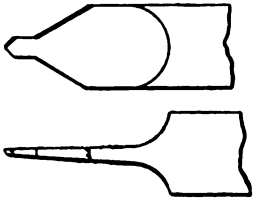

Fig. 50.

Another tool is shown in Fig. 51. It has seven teeth, like a reamer, for the countersink; while the drill is a separate small twist drill fitted into a central hole and pinched with a screw, so that as it wears, it can be advanced for compensation in length.

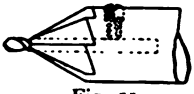

Fig. 51.

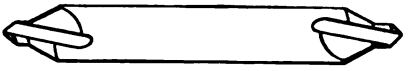

Fig. 52.

The best and strongest form is shown in Fig. 52, made in twist-drill fashion, with diagonal cutting edges, and grooves for oil and clearance of chips. This tool cuts readily, and being made with standard 60° angle, in several sizes, the centre produced can be depended on for accuracy. It is used for centring machines more especially, but the same form is made with a taper shank like Fig. 49. Figs. 50 and 51 should also have taper shanks for lathe use. But the other form in Fig. 52 can be adapted to lathes by fitting a holder or chuck in the taper hole of the poppet spindle.

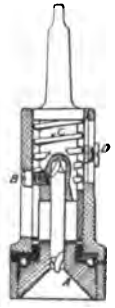

Fig. 53.

A centring tool made by Morgan Johnson, of Hartford, Conn. (Fig. 53), combines a centring drill, and countersink, with a capacity of bar from $\frac{5}{16}$ in. to $1\frac{1}{2}$ in., and taking bars of any section, round, or hexagonal, &c. The cone A is of hardened steel, having a ball race above. The centring tool is held in place by the screw B, and the entire tool revolves, except the cone A,

which is held on the work by friction as soon as the two come in contact. The further feed of the tool to the work, or *vice versâ*, causes compression of the helical spring C, and the feed of the drill. An adjustable stop D permits of working to a uniform depth on successive pieces. The shank is made to suit any taper in lathe, or drilling machine.

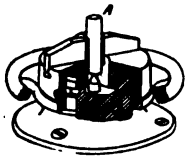
Fig. 54.

A centring chuck (Fig. 54) for bars, by the Cushman Company, is constructed on similar lines to the self-centring chuck by this firm for turning. Its base is screwed to the bench. The body carrying the jaws is turned round by a hand wheel, and the spiral thread on the top of the base engages with threads on the backs of the jaws, so opening or closing them on the bars A, which are then struck on the central punch.

Bars should not be centred and countersunk unless the ends are fairly true; that is, not left as cut off by the hot sett in the smithy. It is not easy to centre them if in this condition, and the rough ends also injure the lathe centres. If brought to the lathe when cut off in this condition, they should be chipped, or ground roughly over the ends before centring, or faced in a centring lathe. Plain bars are better if sawn off with a hack, or a circular saw, as they are then at once fit to centre.

The depth to which work shall be centred depends on its mass. For light work, a fair centre pop, or a hole drilled to a slight depth, is sufficient; but as it increases in mass, the centre must go deeper. But the whole of the cone is never buried in the work. The depth ranges from about one-third to one-half the length of the cone in contact with the work.

Specialisation occurs in the taking of the centring of work for the lathe out of the hands of the turner, and having it done in a lathe constructed for no other purpose but for dressing, or cutting-off, and centring, by a man who never does anything else. In a shop of only moderate dimensions a cutting-off and centring lathe must be regarded as an almost indispensable tool.

There are many firms still in which each turner centres his own work with compass caliper, and centre punch, or drill. The time occupied does not amount to much if the work of a single machine only is taken account of. But multiply it by the total number of machines at which this goes on, and the sum total

in a large shop will be found sufficient to justify the purchase of one, or more facing and centring machines. These are operated by youths, and one machine will supply twenty or thirty times the number of lathes, depending on the class of work done, besides which the centring will be done more accurately, and the ends faced besides, so diminishing the wear on the lathe centres due to the centring of rough ends. The bar to be centred is gripped in a movable head, and run along against a revolving facing, and centring cutter driven by a speed cone. Rods from ¼ in. up to 5 in. or more in diameter can be treated in these machines. Both single and double-headed machines are made.

In a small motor-driven, single-spindle machine for centring shafts up to 6 in. diameter, by Droop & Rein, of Bielefeld, the centring tool is of a special form. It is made in three parts, Fig. 55, comprising an outer circular flat-ended cutter A, which faces off the ends of the work, and a conical reaming tool B, enclosing a small drill C, which has four grooves, two being deep, and two shallow, running parallel. The shallow grooves are used for clamping, and driving the drill by, while the deep ones serve as cutting edges, and permit of a free escape of the chips. Each part of this compound tool can be sharpened independently of the other, and each can be renewed in case of fracture, without throwing away the entire tool. Each also may be used until worn nearly to a stump. The small drill, and the reamer are made of drawn tool steel.

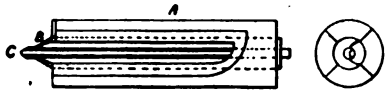

Fig. 55.

Modern high-class centring machines have the following characteristics. A two-jaw concentric chuck is provided at each end of a hollow mandrel, so that a bar is centred at both ends at once, perfectly parallel. A pair of cutting-off rests is moved inwards by means of a handle operating a right and left-handed screw. The slide rest carries a facing cutter and a headstock for drilling up and centring.

In a modified design, the bars gripped with a two-jawed concentric chuck at the front, are cut off by a tool held in a rest bolted to the bed immediately in front of the chuck. Then the bar is held in a two-jawed vice carriage, movable on the bed by screw and hand wheel, and the ending and centring tool is gripped

in the concentric jaw chuck on the headstock, and operates on the bar fed forward to it by the vice carriage.

Centring lathes are made double-headed for the convenience of centring both ends of bars, without having to turn them end for end, as in the single-headed lathes. There are two carriages, and jaws for holding the bars to be centred. One is traversed with rack and pinion, the other is connected to it with a slide rod, so that both are moved in unison in either direction.

In one design, the centring is done by moving the spindle of the headstock forward against the ends of the bar, which are gripped in a concentric chuck bolted to the bed. The movement of the spindle is effected by means of a screw and hand wheel pushing forward the tailpin against the end of the spindle. The tailpin is carried in a bracket which is slid along a plate at the tail of the headstock, the spindle sliding through the hollow driving mandrel. The top of the table forms in the centre a hollow trough for oil, and is provided with a dish running all round to hold the rods to be centred.

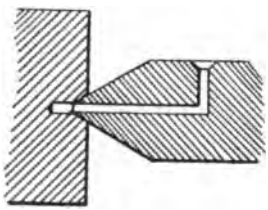

Fig. 56.

Another machine has two spindles, one for facing, the other for centring, and counterboring, and one is brought against the work immediately after the other, the location of the spindles being fixed by stops. The bar is gripped in a vice or chuck with interlocking jaws, and carried at the rear end on a vee with elevating screw. A pan beneath catches the lubricant, and chips.

Cutting-off machines are made without centring heads, for severing bars of stock in readiness to go to lathes. The principal device embodied in these is that of gradually accelerated motion, as the tool moves inwards from circumference to centre. Reverse cones are employed to produce this motion. Lathes of this type have a hollow spindle, through which the bars are fed, and an oil pump and tank are provided for lubrication.

In doing heavy turning it is difficult to keep the centre lubricated, the oil or grease getting squeezed out by the pressure. Then the back centre may have to be slackened to permit of the insertion of fresh lubricant. A dodge which is frequently adopted

is to drill an oil hole in the centre in the manner shown in Fig. 56. A little wood plug must be fitted in the countersunk hole to prevent access of dirt or grit, which would cause scoring and grooving.

Leaving the centre hole in finished work is often not only permissible, but desirable. It is so in any shafts or spindles carrying wheels or pulleys that may have to be trued-up from time to time, or the journal necks of which may have to be re-turned. If the centre must not be left in, an extra length equal to the depth of the hole must be left, and the end turned down close to this, to be cut off subsequently.

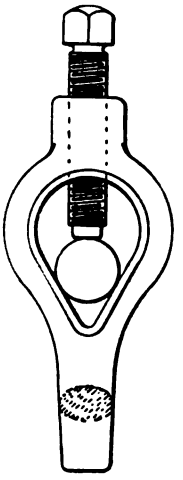

Fig. 57.

As work done between centres is only pivoted on the centres, it has to be rotated by a lever—the driver,—and something has to be provided for the leverage to be exercised on—the carrier, or dog. There are two kinds of these in use, the single, and the double, or Clement's driver. The driving force of the first is unbalanced, that of the second is equal on both sides of the centre, provided it makes contact at both ends of the carrier. Frequently a face plate is used as a means of attachment of the driver. Anything, in fact, will answer the purpose, a small angle plate, a pin or bolt, and other articles are improvised for the purpose.

The common dog or carrier (Fig. 57) is made to encircle and grip the end of the work. This is disadvantageous for two reasons, one being that a shoulder has in some cases to be turned down, and a supplementary portion made to receive the carrier, this having to be cut off afterwards. Another is, that turning cannot be done on the end occupied by the carrier, which necessitates rechucking, end for end.

To prevent the screw of the carrier from bruising a portion that has been finish-turned, a strip of lead, or copper is inserted between the screw and the work. Or a clip of lead, copper, or leather encircles the work to take the pressure opposite the screw, as well as that of the screw itself.

The form just shown is used more extensively than any other,

notwithstanding its slight drawbacks, which do not, however, weigh very heavily in practice. A modification is shown in Fig. 58, in which two horns are substituted for the one in Fig. 57, so permitting of the exercise of equally balanced forces on each side of the centre.

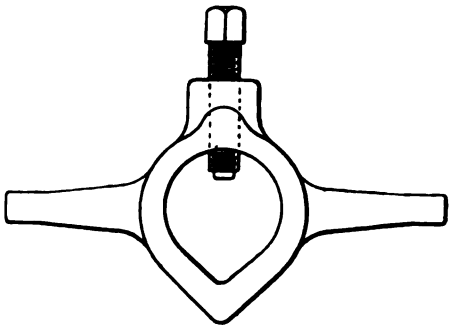

Fig. 58.

The objection to both these designs on account of the pressure of the screw point and the limited range of any single dog, coupled with the fact that such dogs are not truly balanced on the work, is avoided in the dog shown in Fig. 59. A larger gripping area is obtained, with a wider range of adjustability.

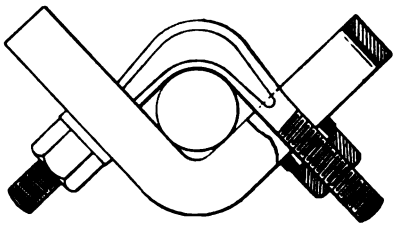

Fig. 59.

The curved faces of the nuts and washers, as shown, allow of the variation in range without any straining to the screws, and also permits the dog to swivel in holding tapered work. Fig. 60 shows the Billings & Spencer dog, which, by the pivoting of the lower piece, is adapted to tapered as well as parallel work, while the adjusting screws afford a good range in diameters.

With regard to the methods of driving adopted, the two commonest are those shown in Figs. 61 and 62. In the first a pin is bolted into a small face plate, used exclusively for driving. Or a pin of the same shape is used in any slotted face plate, the

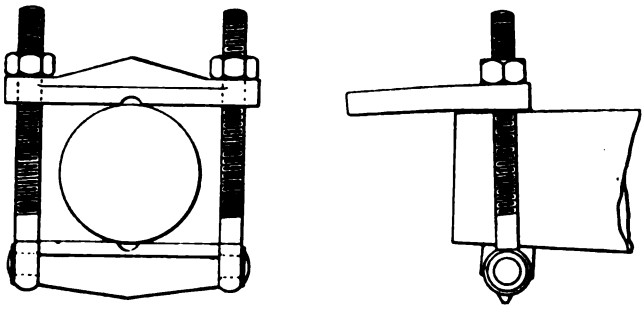

Fig. 60.

slots in the latter allowing of radial adjustments to suit dogs of different sizes. In the other design, the dog and driver are in one piece, the tail of the carrier being bent round to enter a slot in the driving plate. The great advantage is that there is no backlash between the dog and the driver, due to variations in the

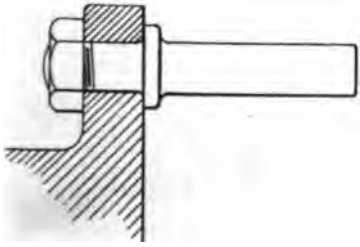

Fig. 61.

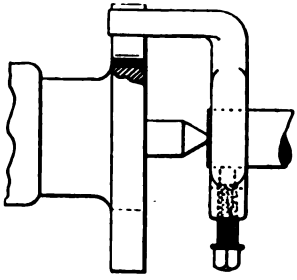

Fig. 62.

driving force brought to bear upon the work, or to sudden jerks. In Fig. 63 the driver is a plain pin, which can be adjusted lengthwise and clamped anywhere. The advantage of this is found when the distance of the dog from the plate has to be varied to suit work. This plan is adopted in several lathes. The same

effect is secured by screwing the pin and fitting a couple of nuts, one on each side of the plate, so allowing of adjustments and of secure clamping.

The Clements driver (Fig. 64) exercises an equal driving pressure on opposite sides of the work, and possesses the power of self-adjustment. The carrier is not shown, nor the lathe centre, which passes through the face plate. The driver comprises the face plate A and the driver plate B carrying the two pins C, C. The driver plate is in the form of a cross sliding freely on the plate A, retained thereon by two fixed studs D, D, in slot holes. These studs are screwed into the plate A, and firmly locked by nuts at the back. The sliding takes place

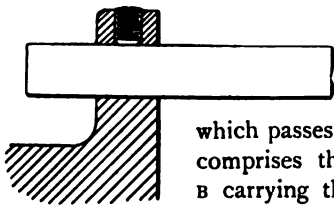

Fig. 63.

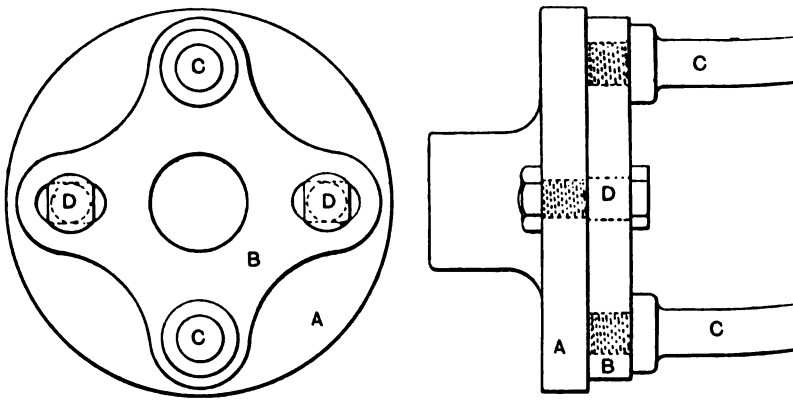

Fig. 64.

first until one end of the carrier meets one pin, when the other end comes along, bringing the other pin into contact with the other end of the carrier, and driving begins. Frequently another pair of holes is drilled and tapped at a smaller radius, to permit of changing the position of the pins C, C for smaller carriers.

Messrs Parkinson, of Shipley, have a form of driver by which

the awkward sticking out of the horns of carriers and of driver pins is avoided. It takes the form of a ring to be screwed to the face plate, and completely enclosing carrier and driver (Fig. 65).

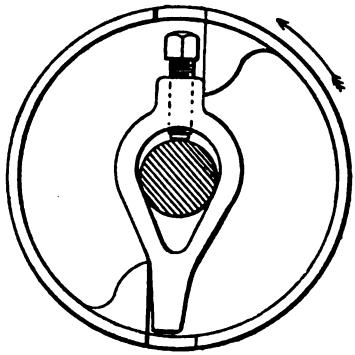

Fig. 65.

There is nothing, therefore, to catch the turner's clothes or hands. It is also a double-driving plate, though not with means of self-adjustment. The protection alone afforded by this is a valuable feature, quite apart from the balanced drive.

CHAPTER V.

Examples of Turning between Centres.

A Pin—Presence of Square Angles—Use of Side Tools—of Parting Tools—Convex Edges—The Use of Two Tools—Checking Parallel Work—Shouldered Work—Curved Tools—Bellied Work—Advantage of Rough Turning—Roughing and Finishing in Different Lathes—Need of Good Support to Tool in Heavy Cutting—Bending of Slender Pieces—Undercutting—Bridging Open Ends—Forked Ends—Methods of Fitting Bridge Pieces—The Use of Wood Mandrels and other Aids—Taper Turning Devices—Various Examples—Lathe with Gears—Examples of Work—Measurement—Emery—Rough and High-class Turning—Output of Lathes.

WE now take a few examples of jobs done between centres by the ordinary methods which are at the command of the general turner.

A pin (Fig. 66) is a common object, which goes to the ordinary lathe in the absence of turret lathes or automatics. Or, in any case, if of large size it will be done in the lathe, being too big for the special machines. In such cases the forging is generally made with the collar and shank nearly to dimensions, instead of turning the piece from plain bar, of the diameter of the collar. Such pieces, if required in quantity, and not too large, are suitable for drop forgings, in which case very little is left to take off; but in small numbers they must be turned from bar, or from anvil-made forgings, with the collars welded on, or the shank swaged down.

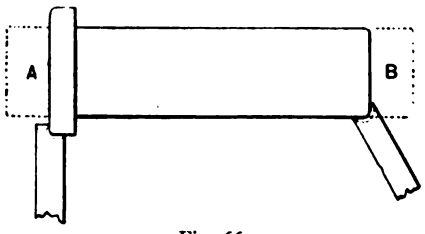

Fig. 66.

In forgings made thus, without any extra allowance in length, two chuckings are necessary on account of having to fit the carrier

at opposite ends. If this is to be avoided, an extra length must be left at one end to be cut off after turning, either at A or at B, Fig. 66, which is not worth the trouble, because it is but the work of a minute or so to turn a small piece like this end for end in the centres, and shift the carrier.

The longitudinal turning is done with roughing, and finishing cuts by means of the various tools of suitable kinds shown in Chapter II. The ends and edges are done respectively by side tools, and radius tools.

In jobs like this, and also in Fig. 67, typical of others, the presence of square internal angles renders necessary the use of square finishing tools, which may be of cutting, scraping, or spring types, according to the nature of the material, and the degree of

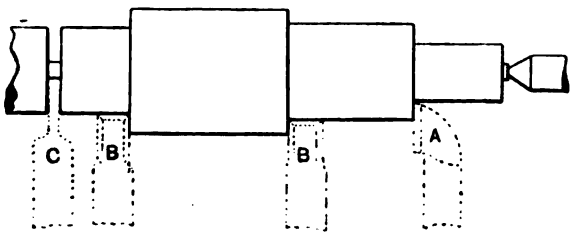

Fig. 67.

accuracy or finish required. The roughing can be done with a round nose tool, or a knife tool can be used, both for roughing, and finish-facing the shoulders.

The side tools, one of which is shown operating at A, Fig. 67, are knife tools, fed to their work by the longitudinal traverse of the top slide of the rest. They are made right, and left to suit opposite faces. They must be set square across if the shoulders are wanted straight, which can be done with a straight-edge, checking it by reference to the edges of the slide rest.

It is convenient sometimes to use one tool for working on opposite faces. This can be done with the side-cutting tool (Fig. 67, B, B), cutting on each edge. The special value of this tool lies in cutting shoulders that are nearly adjacent (Fig. 68), in which case it may be used as a parting tool is. The corners will be square, or rounding, to suit the job. But a proper parting tool

has a clearance backward, indicated at c, Fig. 67, to permit it to penetrate the metal without friction down the sides. If contact occurs there, the tool can hardly be made to penetrate, hence the reason why it must always be set quite square, or normal to the axis of the work. If it is not, the turner soon becomes aware of the fact. (See page 46 for remarks on this tool.)

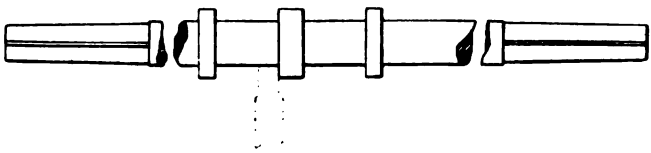

Fig. 68.

The convex edges (Fig. 66) are done with hollow tools (Fig. 69) which are kept in different radii to finish the edges at one cut. The first one is set at an angle of about 45° in the rest, as shown in Fig. 66; the other two are made right, and left-handed, and serve to true the perpendicular faces as well as the edges, so that the latter merge into them without leaving a mark.

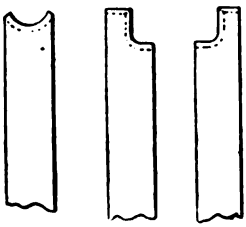

Fig. 69.

Two tools can be used in the rest at once on some jobs, one for roughing, the other for finishing, provided the work is all plain turning without shoulders. That illustrates one advantage of the English four-bolt clamping plate. Even where there is one shoulder or more, the device of two tools can be adopted for the long plain portions, as in a long pin, or the winch shaft (Fig. 68), in which case the roughing tool must be removed when it gets to the shoulder, leaving the finishing one free to complete its work.

In turning examples like Figs. 70 and 71, a considerable time is wasted unless the forgings are stamped nearly to size. If rough hand-made forgings are used, or if the attempt is made to turn from straight bars, not only are templets necessary, but a succession of steps should, for security, be turned down first. Hence the great advantages of doing pieces like this with forming tools in

turret lathes, provided they are wanted in sufficient numbers to pay for the outfit. But if they are not, the quickest way is to shoulder down in steps in the manner indicated by the dotted lines in Figs. 70 and 71, after which the curves can be imparted by operating the cross and longitudinal feeds both by hand, the eye judging of the close degree of approximation to the desired form. Instead of shouldering down in parallel portions, the parting tool can be used in the manner indicated in Fig. 72,

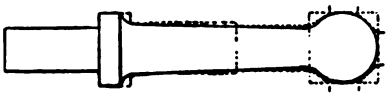

Fig. 70.

Fig. 71.

giving diameters and lengths between which the tapers and curves are imparted.

In these days of growing appreciation of turret work, and forming lathe tools, it may seem to some undesirable to cite examples of this kind, but they are fairly warranted by the scope of this volume. Turret work does not meet the case of odd and occasional jobs; its place is where numbers are concerned. Profile turning with a former, using single-edged common tools, is another alternative; but that involves the making and rigging-up of the former, with the cost of which the job has to be saddled. The shouldering down of pieces in the manner shown is done on the largest articles and on single jobs, the man working direct from the drawing, and with the certainty that the dimensions will be right at the shouldered parts, leaving only the intermediate ones to be done by hand-operated movements of the rest.

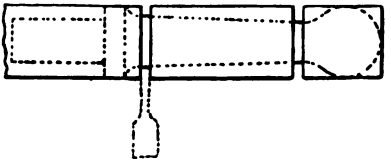

Fig. 72.

A good deal of this manipulation of slides is done, apart from shouldering down, in turning curved and other irregular forms. Rapidity of results depends mainly on the eye of the turner, who, if over-cautious, occupies an unreasonable time in doing the work,

or if careless, spoils it. Frequent trying of templets is necessary, whether shouldering is done or not, except when forgings are stamped with so bare an allowance for cleaning up that they become a guide to finishing in the lathe.

To a certain extent the finishing tools aid the turner here, and conduce to accuracy. Of these a large stock is kept. The nearer the curve of a tool happens to coincide with the curve to be finished, the better; but as that does not always happen, the tool will have to be moved round on its axis slightly by the manipulation of both slides of the rest. These curved tools, both for inside and outside radii, are nearly always horizontal on the top face, acting therefore by scraping simply. But as their function is merely that of removing the marks, and slight ridges left by the roughing tools, they have really nothing to do requiring top rake; which, moreover, could not be imparted regularly all round. Fig. 73 illustrates three round nose tools of different widths and curvatures, but a good many must be kept in quick, and flat radii.

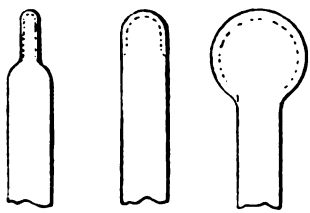

Fig. 73.

Another case in point is that of bellied connecting rods (Fig. 74) that are not made in quantities. These are often turned in a

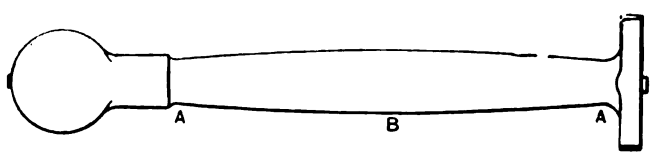

Fig. 74.

succession of steps, leaving the intervening spaces to be done by manipulation of the slides of the rest. But the bellied form is now largely dispensed with in short connecting rods, and in those for small engines, which lessens the cost of turning, the strength allowed being sufficient without including the correct parabolic form that corresponds with the stresses.

The shouldering down of a bellied rod in short sections of a few inches is not necessary if a rod is forged neatly. But forging of this kind has mostly to be done under the hammer, with swages,

dies only being available in rods of no great length. By using a templet cut to the curve, the bellied portion can be turned without setting in, by simply turning the diameters at A, A, and B to size first. A flat-ended tool is used for finishing, the curvature being inappreciable on a short length.

The globular end can be turned to a templet, being generally forged nearly to shape and size, often in dies, even though the shank is not. The globular shape may also be finished smoothly, after roughing down, by a forming tool of that shape, though if only a few rods are wanted of a size, it does not pay to make such a tool. The flat end is roughed down with a round-ended tool, using the cross traverse of the rest, and finished with the side, or knife tools, right, and left-handed.

An ingenious method of turning bellied connecting rods, which saves the trouble of using formers, or of turning in steps, is as follows :—

The handle of the cross traverse screw of the slide rest is taken off, and a spiral cone fitted in its place. This takes the form of a casting, with the scroll going around it about five times. A flat-link chain is wrapped round this, starting at the small, or outer end, where it is fastened with a set screw. A temporary pillar is fastened to the lathe bed, close to the driving head, and to this the free end of the chain is anchored. In operation, the slide rest is started at the largest diameter of the connecting rod, the chain wound round the scroll, and attached to the pillar. The slide rest is then fed away from the headstock. This naturally causes the chain to unwind, and so revolve the scroll, feeding in the screw, and producing the bellied outline, the latter being caused by the fact of the scroll getting smaller in diameter as it nears the outside. After doing half the rod, it is reversed in the lathe, the chain wound up again, and the operation repeated.

The details of the turning of shouldered work are simply settled by convenience. The whole length may be roughed out parallel first, and the shouldered recesses taken after, or each shouldered part can be roughed and finished independently of all the rest. If the latter plan is followed, there is just a chance that when the last portion is finished, that which was first done may be found to run slightly out of truth, due to the removal of the surface tensions. The inaccuracy that could happen, however,

is so slight, that it would not matter in the greater part of engineers' work, nor in work that has to be finished finally by grinding. Moreover, it often happens that some portions are only rough-turned, not being working parts.

Sometimes it is desirable to rough-turn a whole length of material before turning down any shouldered parts, simply in order to reveal any flaws or dirty portions. This is more necessary in wrought iron than in steel, and in black bars than in those which are rolled bright. It is practically always necessary in cast-iron work of cylindrical shapes, and especially so when the casting has been poured on the side instead of on end. It is easy to see how a piece has been cast by noting the locations where joints and runners have been ground off.

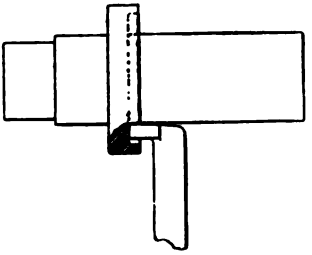

Fig. 75.

When turning work in which shoulders or belts of the same diameter occur, those of one diameter should be finished at the same setting of the tool and rest, and those of another diameter in another setting, and so on. This saves time and trouble.

On some work done between centres, recessing or undercutting has to be done (Figs. 75 and 76). Two kinds of tools are used for this, the right and left-handed parting tools (Fig. 75), and the boring types of tools of roughing, and finishing kinds—that is, round and square-ended respectively, —the latter when the recessing is of some considerable depth, approximating to boring.

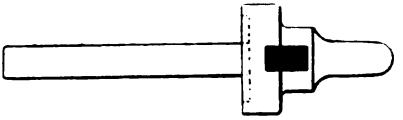

Fig. 76.

In some cases it is advisable to begin a piece of work on one lathe, and finish it on another. Thus work may be roughed out on one, and completed on another, or turning be done in one, and screw cutting elsewhere. Usually this would mean dividing the tasks between a low-paid and higher-paid man, or between an apprentice and a skilled workman, or a plain turner and a screw-cutting hand. Or one lathe may have better facilities than

another for fine finishing, or it may be that a number of pieces are roughed out for stock, and finished in quantities to lessen costs. Or a certain lathe may not be spared for a sufficiently long time to complete all the operations on such pieces. Centred work lends itself to these divisions of tasks admirably, because the conical holes fit any lathe, which is not the case with face plate, and most chucked work, because all chucks cannot be depended upon to carry a piece perfectly true in the same manner that a centre does.

If a tool has to do heavy slogging, it must not only be very stiff, but must be supported, and firmly held almost close up to the cutting point. A cranked tool, therefore, is not so well adapted for heavy duty as a straight one. Occasionally a prop is inserted between the bottom of a springy cranked tool and the carriage, when the overhang is considerable, to serve as a strut, keeping it up to its work.

A difficulty which is often encountered in turning slender work done between centres is the bending of the pieces. Where the best results are desired, a good plan is to rough off the skin first, and lay the work aside for a few days or weeks if possible, when it will often be found to have changed its form, not much of course, but sufficiently evident when rotated in the lathe.

There is a large proportion of lathe work done between centres in which the centres either cannot be got on the work itself, or, if they can, the ordinary method of rotation with carrier and driver is not available. In many cases it is necessary to bridge an open end with a strip of metal, and put the centre in that. In others, a more elaborate fitting—of which a crank plate furnishes an illustration—has to be made. In others, again, the centre is dispensed with at one end, and the face plate utilised for driving by. In others, cone centres are employed. In none of these are the ordinary methods of centring practicable—neither the compasses, bell centre punch, nor centring machine.

When an open end has to be bridged with a piece of metal to receive the centre, the end must be rigid enough to resist any outward pressure exercised by the bridge piece. For example, it would not do to bridge the forked end of a connecting rod, because that would spring the fork outwards, and after being turned, it would spring back, and remain permanently out of truth. Such forked ends should therefore be chucked by the aid of a face

plate, using an angle plate as an intermediary, or else by a special fixture. If, however, a plate be used, it should be combined with clamps to prevent the forks being thrust asunder.

The proper case for plates is in pieces of work that are either

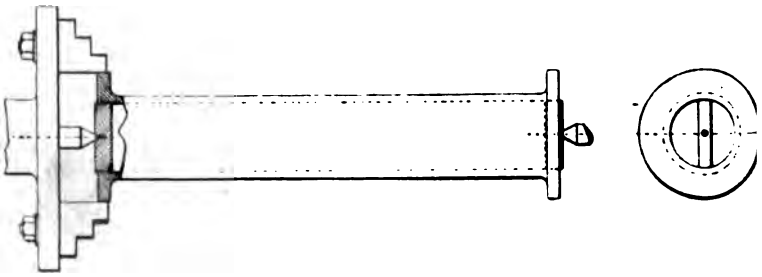

Fig. 77.

hollow and circular, or which are rigid enough in themselves to resist the pressure tending to force them outwards. Thus, many columns have their ends bridged, and held between centres while the flanges are faced and turned. Jobbing pipes (Fig. 77) are treated similarly, as are large bushes, liners, and castings of various shapes having centre cores.

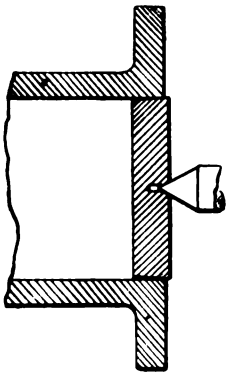

Fig. 78.

But in bridging the ends of a casting, not only has the risk of spring, with resulting distortion, to be carefully avoided, particularly in thin liners, but the bridge also must be so fitted that it will not shift under the pressure of the back centre. Hence the reason of the variety in the methods which are adopted in fitting temporary centres of this character.

In fitting bridge pieces like those in Fig. 77, the ends must be bevelled. If they are cut just square, then, even though driven in tightly, the pressure of the back centre will push them into an uncertain amount. The amount of bevel given is indicated in Fig. 78, the object being to make the piece a driving fit with the hammer, and not quite flush with the end of the work. It may or may not then become pushed in a little farther by the back

centre. Sometimes bridge pieces are fitted with a shoulder, as in Fig. 79. Then the portion that comes within must be bevelled slightly to jam in, otherwise it may work slack. The shoulder prevents the bridge being thrust inwards, but it also interferes with the facing of the end, and is therefore only suitable for adoption when the end has already been faced, or when it may be left rough, which is not often the case, unless in that of liners like that shown in the figure, the ends of which are faced-off flush with their cylinder bodies after insertion.

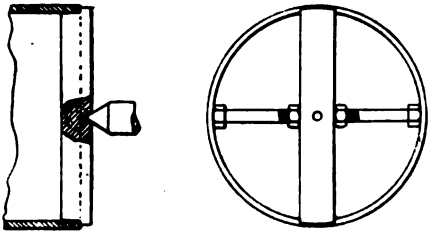

Fig. 79.

Bridge pieces in work of small diameter will not shift sideways, but they are liable to do so in large work, and especially so when it is so slender that hard driving is not practicable. Then bolts are used to steady the bridge piece laterally, as in Fig. 79, which shows a large liner being centred for turning. This plan is frequently adopted in odd sizes of brass liners for pumps which

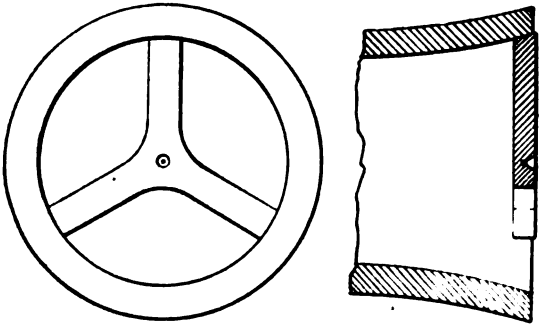

Fig. 80.

would not pay for the cost of special centres, and which are too large for conical centres. The bridge pieces are not driven in very hard, the liners being only from $\frac{3}{8}$ to $\frac{1}{2}$ in. thick; neither are the bolt nuts turned very tightly.

In large pieces of which several have to be turned, a spider centre can be cast like Fig. 80, driven in similarly to the bridge piece. Such a device is suitable alike for parallel work, and for a bell-mouthed end, as in the figure. The ends of the spider can be plain, or, if of large size, can be recessed to form two bearing steps at the outside (Fig. 81), a plan which renders the fitting easier, and more secure in roughly cored holes, as in those of columns.

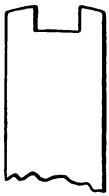

Fig. 81.

Fig. 82 shows an alternative method. A cast-iron disc is centred in a cored hole, or in one in a steel tube, by means of three set screws, provided with locknuts to prevent slacking back.

In the smaller classes of work frequently a better plan to adopt than that of centres, is that of wooden ends, or wooden mandrels. These can be used for pieces that are rough-cast or bored; but wood is not employed as a rule when other devices are available. Still, it fills a very useful place in all turneries.

Large pieces can be chucked with discs of hard wood (Fig. 83), turned, and driven into the ends; or bridge pieces of wood will

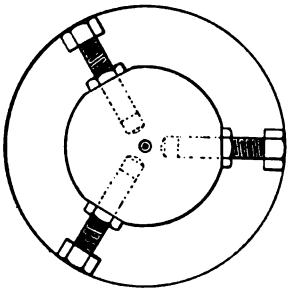

Fig. 82.

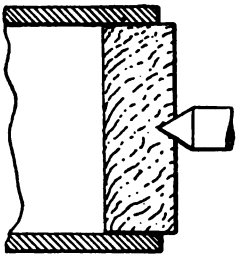

Fig. 83.

answer the purpose in work that is rigid enough to stand the driving. Short pieces of moderate diameter often have a wooden mandrel driven right through (Fig. 84). Hard wood should be used for these ends, and mandrels, because the back centres wear rapidly in soft wood, and cause the work to run out of truth, perhaps before it is finished. Otherwise soft wood is just as suitable. By the use of iron dogs, or end plates to receive the centres, this objection can be obviated. The mandrels must be

turned so that the work will drive over just tightly without spring. A moderate amount of friction will suffice to hold metal tightly around wood. Rough turning suffices, the slight ridges left by a

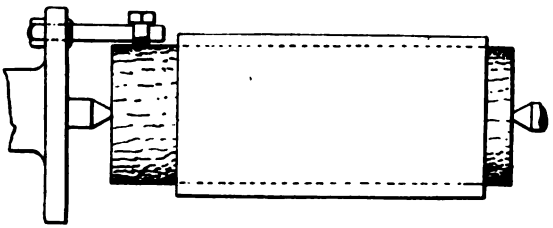

Fig. 84.

round-nosed roughing tool, or by a gouge helping to hold the work better than a very smooth surface.

A stock of plain iron or steel mandrels is an indispensable portion of the equipment of any lathe doing general work. A typical group of these is shown in Fig. 85; but a single lathe will accumulate a stock of several dozens of different lengths and diameters. Most of these are stepped in the manner shown in the figures to take from two to half-a-dozen different bores of work. A flat should be filed at both ends to receive the set screw of the carriers used. It is to lessen the number of these solid

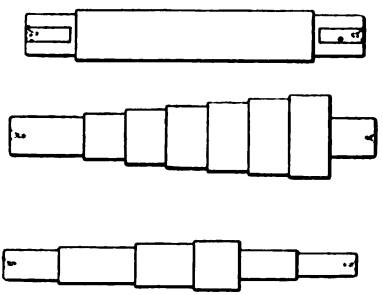

Fig. 85.

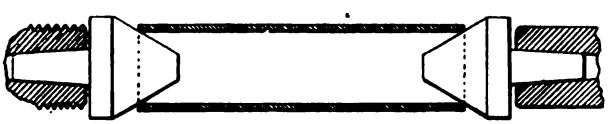

Fig. 86.

mandrels that the various expanding mandrels are designed; but that is another matter to be illustrated later (Chapter VIII.).

A good deal of work of some classes is done on cone centres (Fig. 86). Tubes of wrought iron and steel that have to be

threaded externally are often chucked thus, but the device is also suitable for turning bushes, small liners, and tubular pieces generally. It is suitable alike for bored and for rough-cored pieces. Thus, work will be bored in the lathe or elsewhere, and chucked on the cone centres, to be turned outside, or it will be chucked on rough holes, and turned, driven into its place, and bored there. The cone centres fit like ordinary ones by their tapered shanks in the heads. The friction is considerable between the surfaces of the back centre cone and the hole in the end of the work. To avoid this, many revolving centres are used, the best type being the Taylor (Fig. 87), in which a ball race takes the thrust of the revolving cone, ensuring the minimum of friction. Another common style is that in Fig. 88, in which plain friction washers take the thrust.

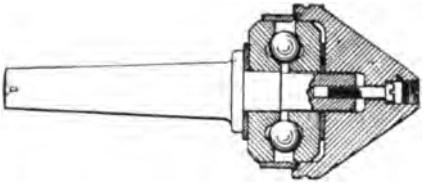

Fig. 87.

An alternative to permanent centres in some classes of large work is to insert a rough temporary centre, and turn a belt on the casting to be embraced by one of the steadies, and so chuck the free end of the work thus.

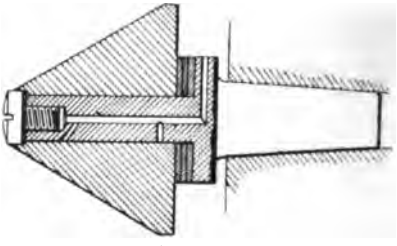

Fig. 88.

Tapers as well as curves frequently alternate with parallel portions on the same piece. These may for practical convenience be divided into long or low-angle tapers, and short or high-angled ones. With few exceptions these are turned in English shops by the aid of the set-over poppet in the first case, and by the swivel slide rest in the second, the taper turning bar at the rear being an alternative not so common. A good many of the lathes in our shops have set-over poppets, but the majority have not, and long tapers therefore cannot be done accurately on all of the lathes in an English shop, but have to be relegated to those that have this adjustment of the poppet.

Tapers of high angle are mostly turned in English lathes by the swivel of the slide rest. When long pieces have to be tapered, there is generally a lathe or two in the shop with a set-over poppet available, though that fitting has, until recently, been exceptional in English-built lathes. Sometimes a bar has been fitted up temporarily behind the lathe to serve as a former to pull over the top slide of the rest against, for finishing. The preliminary roughing might then be done by the method of shouldering in steps, and the manipulation of the slides of the rest. A number of lathes are fitted with a taper attachment

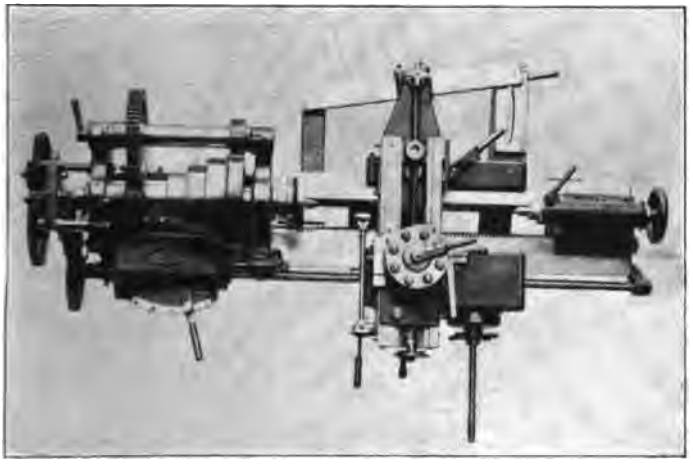

Fig. 89.

behind the bed (Fig. 89), the angle of which can be adjusted within moderate limits. These are excellent devices for medium angles, but not for very short ones, and the fitting of these to a lathe does not render the set-over poppet any the less necessary for very long pieces.

The objection to the setting over of the tailstock is the unequal wear of the centres which takes place at both ends. This is the reason why a limited number of lathes are made with the head and tailstocks mounted on a swivel bed, pivoted on the lathe bed proper, and bolted to it at the angle required. This design

therefore resembles that of the bed and table of many cylindrical grinders, which are set thus for grinding tapers. Another objection in some designs is the risk of not getting the heads back in alignment easily, but this can be ensured by a locking pin.

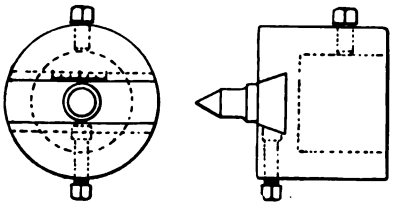

Fig. 90.

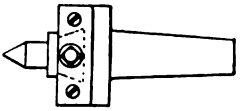

Fig. 91.

In lathes that are not provided with a set-over poppet, a set-over centre can be used, shown in Figs. 90 and 91, and taper turning of small angles done by this aid. One type is shown (Fig. 90) which goes on the spindle nose of the movable poppet, the other (Fig. 91) fits the tapered hole provided for the centre. In Fig. 90 the slide is adjusted by hand, and pinched when set, in the other it is controlled more finely by means of a screw. The graduations (Fig. 90) permit of exact setting.

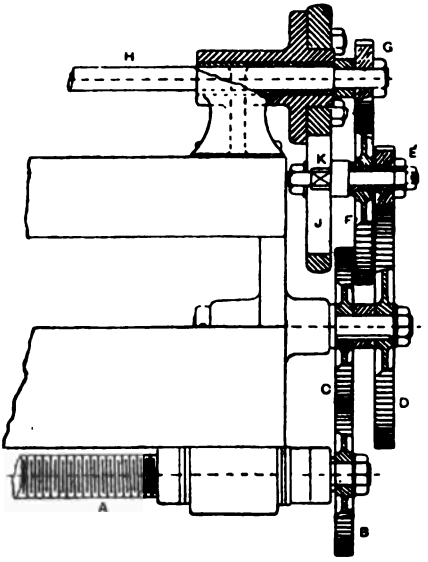

Fig. 92.

Taper turning lathes are a rather special class which differ from standard self-acting ones in a special provision for turning long tapers. These are not to be confused with common lathes which have taper turning attachments at the back, or have set-over poppets, or swivelling slide rests.

For taper turning by gear, Messrs Greenwood & Batley Ltd.

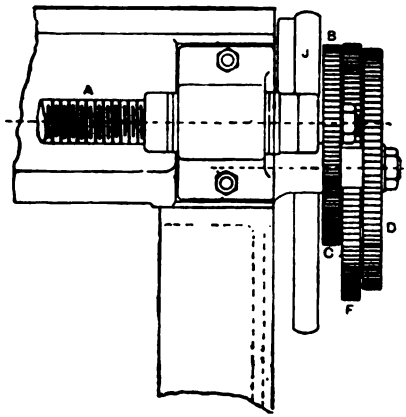

Fig. 93.

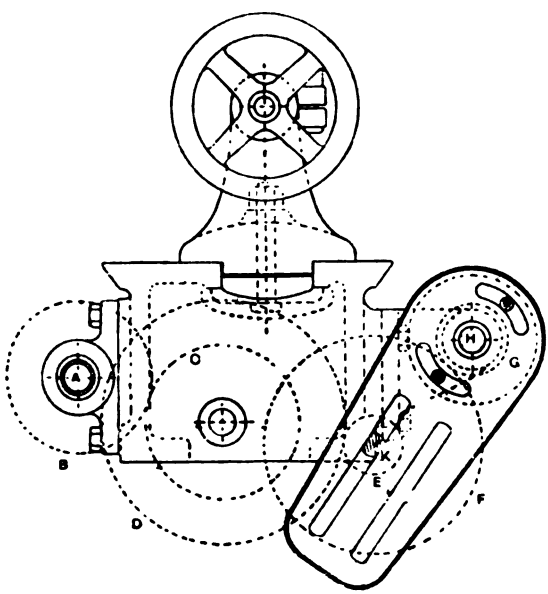

Fig. 94.

make a special series of lathes, the machines being ordinary self-acting sliding, surfacing and screw-cutting lathes, with the gear added. It simply comprises a set of change wheels for gearing up the tail end of the leading screw with the tail end of the backshaft, by which the movement of the screw is transmitted in the ratio required to the back shaft, and thence to the cross slide screw of the saddle.

Figs. 92 to 94 show the gear arranged at the right-hand end of the lathe bed; Fig. 92 in plan, Fig. 93 in elevation, and Fig. 94 in end view.

On the right-hand end of the lead screw A, a gear wheel B is permanently bolted. This drives another permanently fixed wheel C, of equal diameter. Changes are effected between wheels D, E, F, G, which form a compound train gearing down to a slow speed on the backshaft H. The swing plate J permits of the making of changes on the stud K, as in ordinary screw-

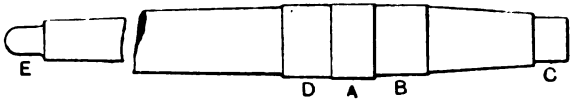

Fig. 95.

cutting gears. These lathes are made in 6, 7, 8, 9, 10, and 12-in. centres, and the tapers which can be turned range from 0.2 to 0.4 in. per foot.

An example of long tapers is given in the steel crane post (Fig. 95). In this case the tapered parts do not make a fit with any portion of the crane, and they would therefore usually be turned only when the forgings were made roughly, for good appearance sake. The fitting parts are A, B, C, D, and E only. It often happens in big forgings like this that these belts and the tapered portions run out eccentrically by as much as $\frac{3}{8}$ or $\frac{1}{2}$ in., and then a rough cut must be taken over a portion or the whole of the tapers. The live spindles of large lathes, the tapered spindles of some connecting rods, afford other examples of long tapers turned by setting over the poppet to half the amount of the total taper required.

On these long tapers the fact that the axis of the work does not coincide with the axis of the poppet centre is not objection-

able, as it would be if short tapers were being done in this way. But it may be laid down as a safe canon that when tapers are short enough to be done by the slide rest, this method should be preferred to the use of the poppet. And the greater number of tapers required are short, or else of medium angle. Fig. 96, a valve plug, is an example of a short taper done by the slide rest. It is never quite safe to trust to the divisions of the circle on a slide rest in measuring angles, if the results are required very accurate. Trial cuts should be made on a slightly larger diameter than that required.

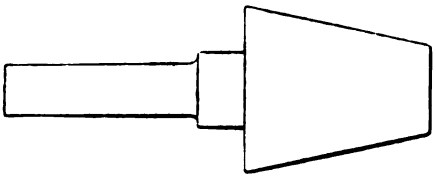

Fig. 96.

The setting of the rest for turning tapers is not usually necessary when the tapered portion is short enough to permit it to be covered with a knife tool, or a broad finishing tool, as in Fig. 97. The angle in such a case can be obtained by means of a templet, either tried on the work or employed to set the tool by. If a bevel of no great length, but longer than the tool, is not a working part, this also will be frequently turned without resetting the rest to the angle, by manipulating the two slides of the rest, using a roughing tool and finishing with a file. So, also, if chamfers are being turned preparatory to producing convex forms, there is no need to shift the rest round to an angle, but the chamfers can be taken off by working the two slides and judging by the eye of the approximation required.

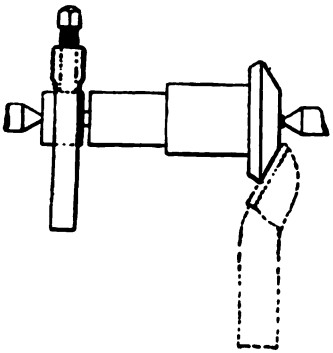

Fig. 97.

The methods of measurement which are commonly adopted in the general shop include those by the common calipers, rule, and ring and plug gauges, besides other special forms, horse shoe, &c. The various gauges are used for even dimensions, as eighths, sixteenths; and for press, and loose fits. If odd dimensions are

wanted, the calipers are employed. Their value lies in the facility which they afford for checking dimensions that are getting down close to size. A gauge must either go on, or not. It cannot be accommodated to slight variations in dimensions, as calipers can. And therefore these are in constant use in all jobbing, and general work, and the man who knows how to handle them delicately can turn thus within very fine limits.

Fig. 98.

The micrometer calipers are employed less in the general work of the turnery, than in the tool room, and in special departments. The subject of measurement in general will be found treated in Chapter XVI.

Turned work is often finished with emery, in the form of paper, or cloth, or as powder in hinged clamps. One of the latter is shown in Fig. 98. Care must be taken to traverse the clamps during the act of polishing.

CHAPTER VI.

THE USE OF STEADIES.

Fixed Steadies—Travelling ditto—The Sleeve Form—Fixed Wood Bearings—Steadies with Adjustments for Centres and Diameters—Hinged Type—Three-jawed Steadies—Two-jawed ditto—Steady for Rough Bars—Turning Necks—Lubrication.

A STIFF piece of work will stand any amount of cutting without any support except that afforded by the lathe centres, but slender pieces need support at an intermediate stage or stages. Hence the employment of steadies, or stays, which are of several forms, fixed, and travelling.

The fixed, and the travelling steadies have their distinct uses. Pieces in which the length greatly exceeds the diameter, of which shafts are typical, must have travelling steadies. Such a steady bolted to the carriage of the rest has the advantage of supporting any work, shouldered or not, close to the tool. But its proper place is in pieces that run parallel from end to end. Shorter, stiffer pieces need only be supported in a fixed steady. The latter are also of service when shoulders or collars of no great length themselves, but on long pieces, have to be turned, the steady being brought as nearly up to them as the lathe carriage will permit of. They are employed, too, when boring has to be done from the loose poppet.

If steadies encircle turned portions, as they generally do, a neck has to be turned first to receive them, and this turning is liable to spring slender pieces, unless a very light cut only is taken. But rough black shafts may be supported in steadies when journal or bearing necks only have to be turned. In that case a sleeve form of steady has to be employed (see Fig. 106, p. 100).

The various steadies here illustrated include the principal forms used. The wood-turner often employs a vee'd steady, travelling behind the work; but this is not reliable enough for

metal work, unless in the case of very light pieces of no great length. A wood-turner will often steady work of small diameter by placing the forefinger of the left hand under the rest, and behind the revolving piece opposite to the tool, simply because there is no time to spare in fitting up a steady. Another crude way is to wedge a bar of wood between the ways of the bed at such an angle that it will take a slight bearing against the work. The patternmaker uses steadies in turning pipes and columns built on the general model of Fig. 99, using blocks of soft pine fitting in the same vee'd edges B, B, but bored to the different sizes required. These are lubricated with plenty of soft soap. In such a design, when used in the iron turnery, blocks of hard wood are fitted by the carpenters, to receive a neck turned on the work preliminary to the general roughing down. Steadies of this type fill an important place in some shops, but chiefly in the heavier class of turning, ranging from, say, 3 in. to 6 in. or 8 in. in diameter. Here they are indispensable. They are also especially useful to support the free end of a heavy piece of work that has to be drilled or bored in from the loose poppet, or for which the cone plate would be neither large and stiff enough, nor afford sufficient length of bearing surface. The form of the standard is unimportant, varying with the size of lathe, being plated and ribbed in the larger sizes. It fits between the ways of the bed, and is bolted down thereto.

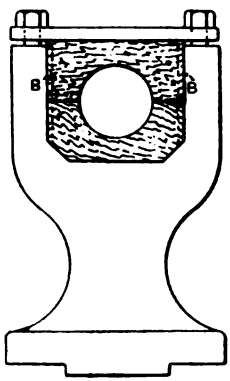

Fig. 99.

The objections to steadies of this type for the ordinary run of work are that they have no means of adjustment of centres, the holes having to be cut right at once, and that separate blocks have to be made for each diameter, however slightly this may vary. In an ideal steady, provision should exist for adjustments both for centres, and for diameter. The first is obtained by making the steady piece movable, both vertically and horizontally (Fig. 100). A horizontal movement alone is better than none at all, and so many steadies have this, without the vertical. Another system is that of three tongues moving radially, which gives perfect adjust-

ments. When, in addition, the upper portion of the steady is hinged, the most perfect type is produced (Fig. 101). It is best to have the actual faces which are in contact with the work radial. These are as good as the contact of blocks all round. Three points are better than four, and therefore nearly all high-class steadies have three adjustable strips, though these are often very differently designed.

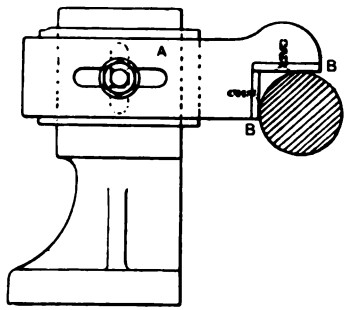

Fig. 100.

A common form of steady for light work is that in which a bearing is taken at the back, and above the revolving piece (Fig. 100). This is very serviceable for light pieces not subject to heavy cutting, because the principal thrusts take place in those

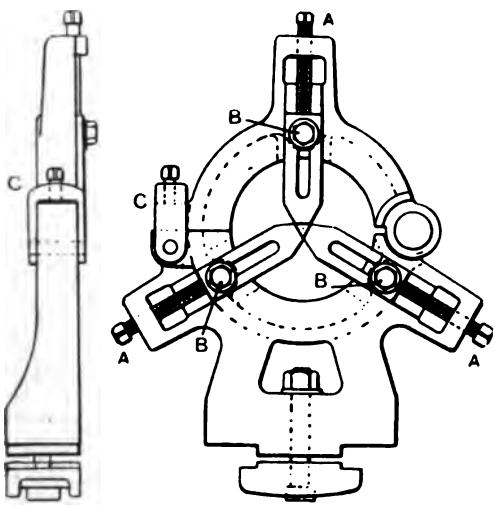

Fig. 101.

directions, but it does not prevent jerks under sudden changes in the cutting stresses, nor under regular heavy cutting. This is a travelling steady. The bearing faces have strips of steel, or gun-

metal B, B, screwed on. The carrier A slides along the face of a block which slides up and down the bracket, within the limits allowed by the vertical slot hole.

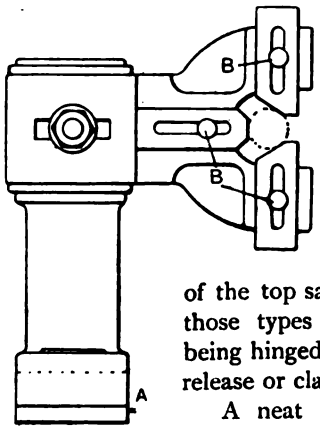

Fig. 102.

The three-jawed steady (Fig. 101) is made now more frequently than of old. The design shown is one much used both on English and American lathes. The three screws A, A, A, permit of making very fine adjustments of the jaws, and the bolts B, B, B, clamp them firmly. The hinging of the top saves much time by comparison with those types which embrace the work without being hinged, and the strap C permits of instant release or clamping of the cap.

A neat form of travelling steady of the three-jaw type is shown in Fig. 102. This is hollowed out at A to bridge over the cross slide of the carriage to which it is bolted. The three jaws are

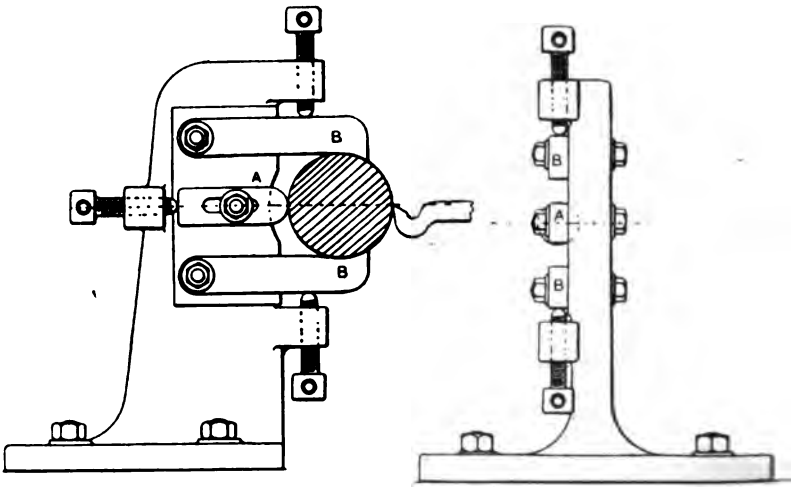

Fig. 103.

each adjustable independently by the slot holes sliding over their bolts. The latter B, B, B, have round heads, as shown. Fig. 103

is a design which is common on Continental lathes. Here the horizontal adjustment is in the jaw A, and the vertical in B, B. A set screw to each jaw permits of exact settings, and a clamping bolt to each pinches the jaws. These are commonly used on lathes of large and small size.

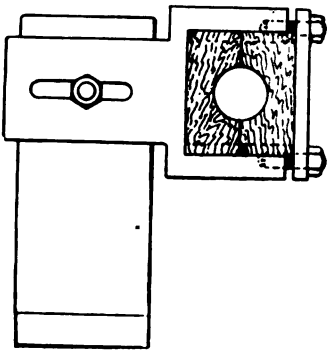

Fig. 104.

Figs. 104 and 105 represent forms of steadies with double jaws. The first has horizontal adjustment only, and wood blocks fitting by vees. The second is a better one, with vertical movement to the die blocks, of which two alternative forms are shown.

Fig. 106 is a form of steady employed when rough bars have to be supported during the turning of journals. The bar A is

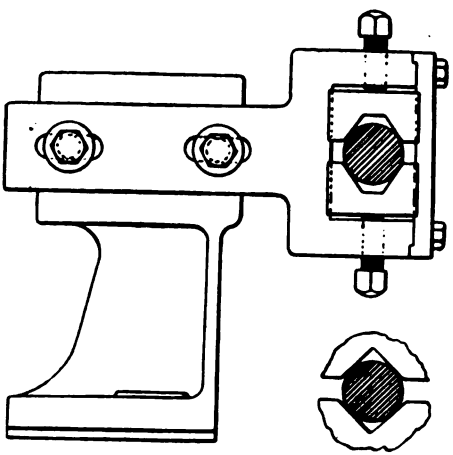

Fig. 105.

centred in the sleeve B by the set screws until the turned outside of B runs true. The turned part may then run in a steady like Fig. 101 or other suitable type, or in Fig. 99. The rig-up in Fig.

106 is also suitable. An angle plate C, bolted to the lathe bed, carries a looped bar D, within which the sleeve B revolves. Although it only touches D at two points, it is steady in working,

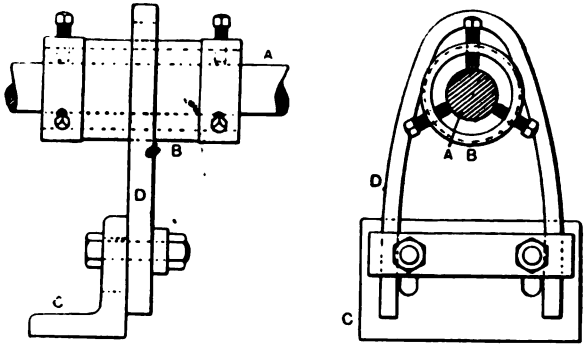

Fig. 106.

because the pressure of cutting causes always the bar to be thrust upwards.

Fig. 107 is only a steady by courtesy. Its function is to sustain the weight of long shafts away from the rest, and so prevent sagging. It is bolted to the lathe bed, and the vee is adjustable for height by the handled nut A.

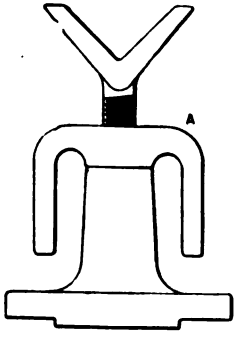

Fig. 107.

A special steady for cranks is shown at page 108 (Fig. 120).

Turning down necks for steadies is easy enough after a start is made at one end, as when a travelling steady has to be used. But to turn down somewhere near the centre of a long flimsy piece to take a fixed steady requires management. If in turning, the portion done is left elliptical, it cannot be got true afterwards. The steady will coerce it as long as it remains embraced, but spring will follow on its removal. The way to start in such a case is either to take an extremely light cut, which will not exercise

much pressure on the bar, or to encircle the work with a revolving collar (Fig. 106) which permits of accommodation for eccentricity of the shaft.

All work running in steadies should be kept well lubricated. Another point is that in the case of steadies travelling on the carriage the drip-can or oil-pipe is brought close to the steady and tool point, and so discharges upon both, ensuring good cutting and a smooth action in the steady.

CHAPTER VII.

Examples of Turning involving Lining-out for Centres.

The Case of Flat, Forked, and Bossed Ends—Centring on Vee Blocks—By Scribing Block—Eccentric Spindles and Cranks—Alternative Methods of Chucking—Valve Rod—Connecting Rod—Forked Rod—Crane Hook—Cock Plug—Machine Arm—Throttle Valve—Dip Crank—Centring Plates—Strutting—Steady—Three-throw Crank—Forging for—First Chucking of—Removing Metal between Webs—Re-chucking on Crank Plates—Method of Making Plates—and Setting—Driving—Counterweight—Roughing down—Support against End Pressure—Finishing — Cranks having Pins Forged.

WHEN the centres of pieces having flat, forked, or other extended forms of ends cannot be obtained directly in a centring lathe, or by compass calipers, or by bell centre, the work is supported by its circular shank on vee blocks, and the centres obtained by means of a surface gauge. If the centres were got by the broad ends alone, the probability is that the shanked portions would not hold up to dimensions, and therefore the shank always receives the first attention. If, after the centres for this are obtained, the ends are found on testing, not to hold up everywhere, then the centres are corrected, to average the allowances for turning between the shank, and the ends, more being taken off on one side than the other.

Lining-out on vee blocks would be done on the connecting rods shown in this chapter, if they were forged on the anvil, and there is the more need of it as dimensions increase. In small rods, partly or wholly drop-forged, or if hand-forged, and having, say, between $\frac{1}{8}$-in. and $\frac{1}{4}$-in. allowances for machining, lining-out would not be necessary. But it would often be desirable then to run centre lines along the shank to get the centres on the ends.

The methods of chucking shown in these figures illustrate alternatives. In Fig. 108 the valve rod is chucked by two plates A, A, clamped across the bossed end to serve as carriers, and the

driver pin B fits between them. There is no pressure tending to spring the eye out of circular, or into winding flatwise. A single bolt suffices to clamp the plates. At this chucking, the stem and the end to be subsequently screwed are turned. There may be a second chucking, or not, depending on the method adopted for

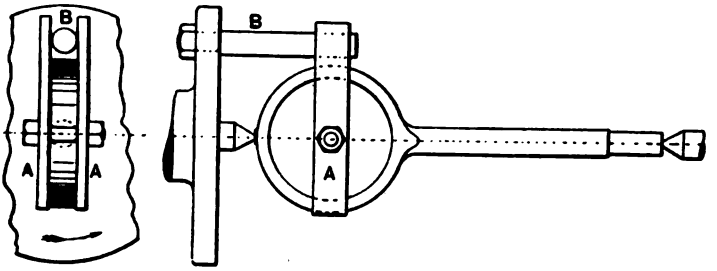

Fig. 108.

machining the ring or eye. Sometimes the outside of the ring is turned in the lathe, sometimes ground only, on a grinding machine with rest, the latter being generally done in commercial engines. Milling is also done instead of grinding. The hole is frequently bored on the face plate. Another method is to mill round the hole on a vertical spindle machine, with circular table,

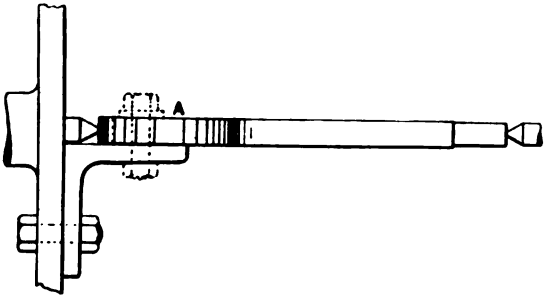

Fig. 109.

in which case the outside also may be done at the same setting, and a neat and accurate job secured. The flat faces have to be tooled, and these can be milled, or planed, or faced in the lathe. This operation is done after the turning of the stem, the flat faces being finished flush with the diameter of the stem.

Fig. 109 illustrates an alternative method, requiring the use of an angle plate. The rod is centred, the angle plate brought up against it, a washer plate A bridged across the loop, and clamped with a single bolt.

Fig. 110 is a connecting rod centred, with the angle plate brought up tight against it, and there held with the bolts that

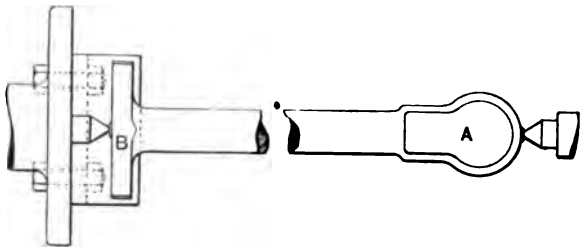

Fig. 110.

fasten the angle plate to the face plate. No other fastening is required, the plate becoming an efficient driver. The only reason why a bolt is used in Fig. 109 to clamp the loop to the angle plate, is that the loop, being flimsy and liable to spring, is better secured with the bolt.

The example in Fig. 110 is turned all over in the lathe, with

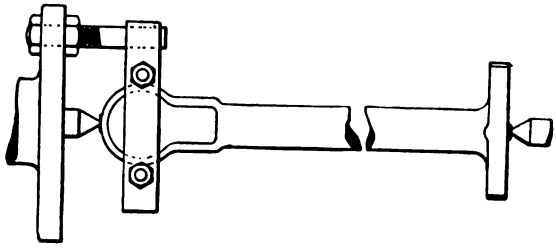

Fig. 111.

the exception of the flats at A and B on opposite sides, which are shaped or milled. Two chuckings are necessary, the one in Fig. 110, where the shank and the globular end are turned, and that in Fig. 111, where the faces and curved edges of the flat end are turned. Either chucking can be taken first. The chucking in Fig. 111 is like that in Fig. 108, but as the driver pin will not fill

up the space between the plates, a bit of packing should be inserted, so that no backlash will occur between the intervals of turning the cylindrical parts. In this example the flats at A and B are shaped, or milled, subsequently to the turning, being done on shaper centres, and a seating for the brasses for the little end of the rod has to be bored, and slotted finally.

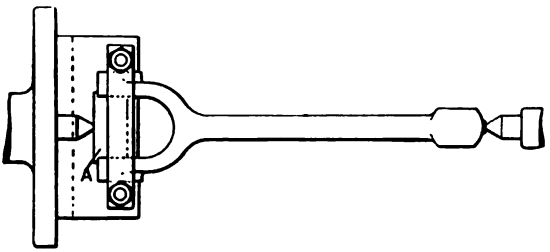

Fig. 112.

Fig. 112 is an example of a forked rod. The forked end might be bridged with the piece A, and centred on that and driven with a pin, as in the previous figure. But the bridge piece might work loose, and the forks become atwist under the pressure of the centre and the driver pin. It is therefore better to bolt the fork down to an angle plate in the manner shown,

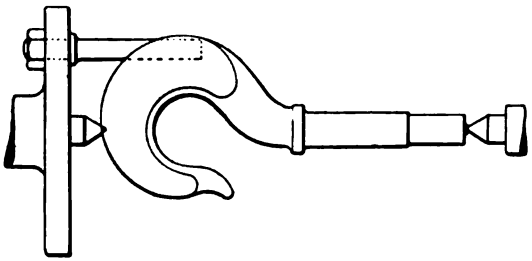

Fig. 113.

and this is more necessary as forks increase in dimensions or in lightness of section. A solid forged fork, which has to be slotted from the solid, can be centred simply, and driven by a pin. In this case, where there is a good deal of tooling, the turning of the shank should properly be done first, and then, leaving the centres in, the marking-off can be done for shaping, milling, or boring.

Crane hooks, Fig. 113, have to be turned where they fit in

their snatch-block crossheads, and on the collar. A rough lining-out is done to locate the centres, particularly the one in the hook part. Sometimes this plan is not followed, but the turner runs the hook round between centres in faint centre pops, for two or

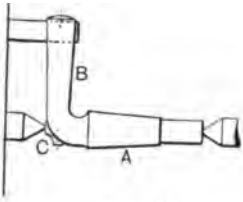

Fig. 114.

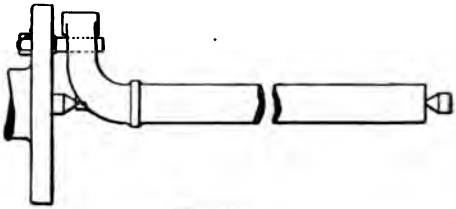

Fig. 115.

three trials, until the shank runs true, when the correct pop is deepened for turning on. A single driving pin suffices.

Large quantities of work, particularly on brassfinishers' fittings, have to be chucked twice. An example is given in Fig. 114, where the plug portion A and the handle B are turned on axes at right angles with each other. It is usual to cast nibs, or tits on at C to receive the lathe centres, and these are cut off after the turning is completed. The reason is to avoid unsightly centre holes being left in the finished work, and partly to get flat faces instead of sloping ones to receive the centres. Another typical example of this kind is the overhanging arm for a milling machine (Fig. 115), that is centred on a nib, and which is generally left *in situ* to permit of re-truing up subsequently if necessary. The same centres serve for lathe and grinder.

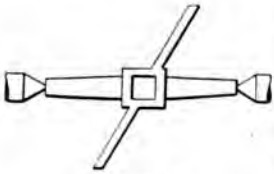

Fig. 116.

Fig. 116 illustrates a case in which long stems are cast on simply for chucking by. It is a common throttle valve turned on the edge at a definite angle, being that at which it lies when closing its passage. The stems are cast on long enough to permit of traversing the tool over the extreme positions of the cut.

A good example of work involving several important matters is the dip, or the webbed crank, of one, or more throws. No portion of a crank should be finish-turned until the centres of

every portion are located, and the amounts of metal available for reduction ascertained. Nearly always chucking blocks are used for cranks. It is necessary, unless the forgings have been made in dies, to test the capacity of the different parts for holding up, either on the marking-off table, or in the lathe, and if found insufficient in places, to send the work back to be re-set, or to average the turning allowances to take out all the black.

A crank is an object that can only be chucked directly on

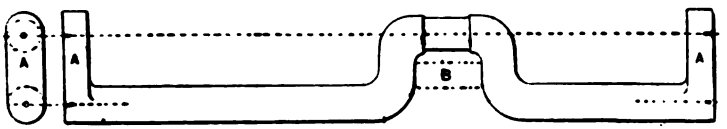

Fig. 117.

centres for turning the axles, or straight portions by. It is also a flimsy article, the end pressure of the centres tending to bend it in the dip or dips. Fig. 117 shows a device that is sometimes adopted in small cranks, either hand, or drop forged. Ends A, A, are forged on the axle portion, simply to serve for chucking by. As these have to be cut off afterwards, the economy over loose chucking plates is not apparent. Fig. 118 illustrates the plan more commonly adopted. The crank is first chucked by centring

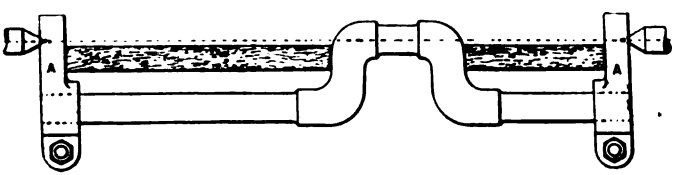

Fig. 118.

on the axle, and the latter is turned first. The plates A, A, of cast iron, bored to suit, are then clamped on the ends by means of the bolt, tightening the split boss. A plate for a two-throw crank is shown in face view in Fig. 119. The same can be used for a single-throw crank, or a plate with one centre can be made.

When a crank is centred in readiness for turning, it often has to be strutted to prevent it being bent inwards by the pressure of the centres. A common device is illustrated in Fig. 118, where strips of wood afford support during the turning of the crank-pin.

During the turning of the axle a strip is inserted in the dip, as indicated by the dotted outlines at B in Fig. 117.

There is a good deal of spring developed, due to the deep bend, while the job does not afford much facility for the use of steadies. A common steady can be used when turning the axle portion, but not when turning the pin. But as it is necessary to steady the axle of a flimsy crank while turning the pin, and as the axle describes a circle, a revolving disc steady rest is required, made after the style of Fig. 120. The disc rotates, and is checked in a body, which is either capped, or hinged, as shown. The axle runs in a bush, which is adjustable in a slot in the disc, and held fast by two bolts passing through slots. Cranks of different throws can be turned in the same steady, which is the object of the slot in the disc. Separate bolt holes are then made for the

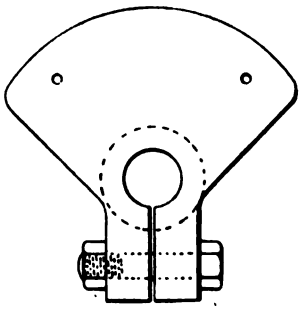

Fig. 119.

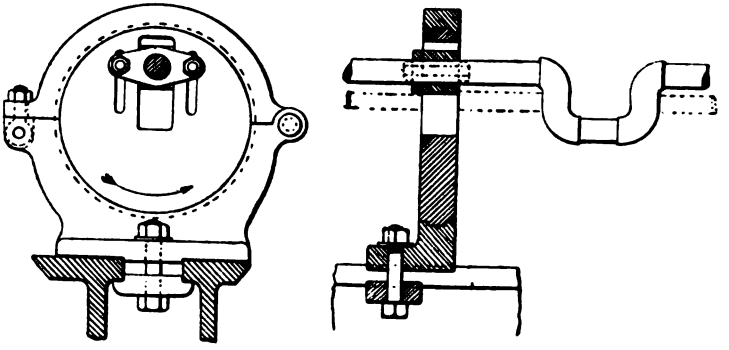

Fig. 120.

bush, or long slots preferably, as shown. The steady can be packed up on the lathe bed to suit centres of different heights, though it is generally made for one lathe only, which is kept for crank work chiefly. When a steady of this kind is used, the crank can still be strutted by giving the wood props a bearing against

the disc faces. In stiffly built, short cranks, the struts can be dispensed with, but not in light designs.

The turning must be done with light cuts, and fine traverse feeds, using a rather pointed roughing tool. A spring tool is often employed in finishing work of this character, though frequently its use produces journals which are not truly circular, though they look very nice and polished. No keen corners are permissible on any cranks, but every corner must be finished with a round-nose tool.

A three-throw crank (Fig. 121) is rather a tricky article to turn, partly because of the difficulty of getting every portion to hold up to size, and partly because of spring, the amount of which is considerable, both in the dip cranks, and in the webbed cranks. The latter (Fig. 121) are often forged with solid webs, or the

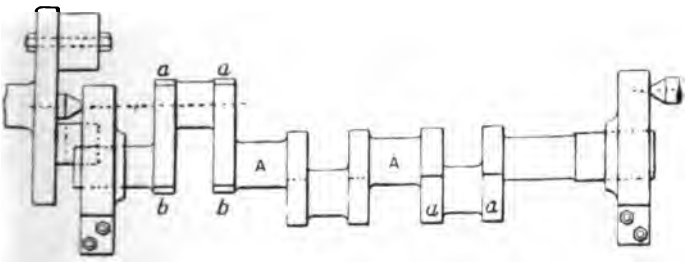

Fig. 121.

cranked portion is not recessed out, but is a plain rectangular lump. Fig. 122 shows the forging, at an early stage, out of which the crank has to be shaped. It has the circular portions swaged down from a slab of the size of the solid webs, and the webs are turned round to their respective angles while hot. In some cases, however, webs may be welded on the shaft portion.

The forging is first chucked between lathe centres, with the shaft portion central with the axis of the lathe. The diameters of the end journals are turned, and the middle portions, or necks (A, A, Fig. 121) between the webs, and also the outside flat faces of the webs, are rough-turned all at one chucking. While in the lathe, the longitudinal centres of the crank-pins and webs can be marked from the lengths set off on a strip of wood, and also the widths of the spaces between the webs, equal to the lengths of the pins, and the widths over the webs, all can be marked-off and

scribed at right angles with the axis of the shaft, and centre-popped.

The metal between the webs has now to be roughly removed before machining the crank-pins. There is a special machine used in loco. shops for nibbling out the metal; but the general way of cutting it out is by drilling, slotting, or sawing. The crank is rigged up with one web at a time suitably blocked up, and adjusted underneath a drilling machine, and holes are drilled in the two corners (*a*, *a*, Fig. 122). The holes are of large size, say, from 1 in. to $1\frac{1}{2}$ in. diameter, according to the size of the crank, and the sawing or slotting which is done subsequently comes right into these holes.

Any suitable rig-up will answer for the drilling, depending much on the type of machine under which it is done. The machine may have a slotted bed level with the floor, or a slotted

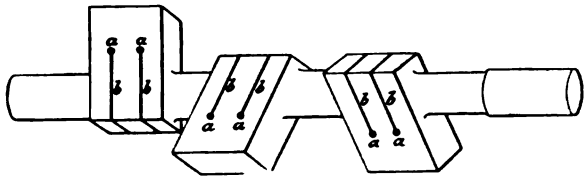

Fig. 122.

table 2 ft. or 3 ft. high. The slots will be utilised by bringing long tee-headed bolts therefrom and fastening the crank down thereto, through the medium of the bolts and crossbars covering one of the webs of the crank—the web which is being drilled at the time. The turned ends of the crank shaft will rest in vee blocks resting on the table, or be blocked up on castings standing upon the bed. I need not illustrate these arrangements.

After the two holes, *a*, *a*, are drilled in each web, there are two ways in which the metal can be removed. One is by sawing, *b*, *b*, from the outside inwards to the holes *a*, *a*, Fig. 122, using one of the cold-iron saws which are found in all well-equipped boiler-shops or smithies, and then to slot transversely from hole to hole. Another is to slot wholly, not sawing at all. In either case the cost is slight—say, about 1s. per dip, or crank, only. When sawing down, from $\frac{1}{8}$ in. to $\frac{3}{16}$ in. is quite enough to allow on the inner faces of the webs for subsequent turning.

After the saw-cuts have been run down by the sides of the

webs into the drilled holes, the crank is taken to the slotting machine, and the bridge of metal at the end between the drilled holes *a*, *a*, is divided. The crank is now ready to go to the lathe to be turned on the pins, and inner faces of the webs, and on the edges.

To chuck the crank (Fig. 121) two special plates have to be cast. One of these is shown in Fig. 123. It is designed and used in the following manner:—

The three crank-pins, being arranged equidistantly from each other—on a circle 120° apart—the size of the chucking plate is determined by this. The three centres shown correspond with the centres of the [illegible] metal must be left fro[illegible] to the edges of the plates, say, from 2 in. to 2½ in. The circle on which the centres are pitched is struck from the centre of the plate, corresponding with the centre of the end journals of the crank. The casting is bored out here to a diameter equal to that of the journals. There are three other centres, pitched midway between the centre of the journals and the centres of the pins, to chuck the crank for turning the curved edges of the webs.

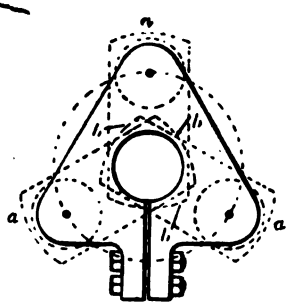

Fig. 123.

The plates should be stout, say from 2 in. to 2½ in. thick. Steadiness on the journal is secured without unduly increasing the thickness of the plates, by casting a boss on the main centre. The bored holes in the bosses are made to embrace the journals tightly by gripping the bosses around the journals by a split lug, the splitting being carried through the boss to the bore. The lug and boss are divided in the mould by putting a print on the pattern, and casting in a thin plate, say, $\frac{3}{16}$ in. thick, well loamed or blackwashed over.

The plates are adjusted upon the crank before final tightening up of the set screws in the lugs, by means of square, and scribing block, the crank being blocked up on vees on the marking-off table, or else upon a lathe bed, or on the table of a planing machine, until the alignment of the centres of the crank-pins and of the corresponding centres on the chucking plates is secured.

The crank is driven from a face plate (Fig. 121) by means of a small angle-plate against the edge of the chucking plate adjacent. To counterbalance the mass of the two plates to one side of the centre, a weight is bolted to the face plate. An alternative way is to use a counterweight like Fig. 124, clamped on the axle. The two bolt holes at *a*, *a*, serve for the attachment of extra thicknesses, A, to serve for heavier cranks.

If now one of the necks A is turned lightly with the axle on centres, the ordinary steady rest can be introduced, and the remainder be finished with heavier cuts. But no portion should be finished down to size until the whole of the axle and the web faces adjacent have been roughed down to within, say $\frac{1}{16}$ in. of

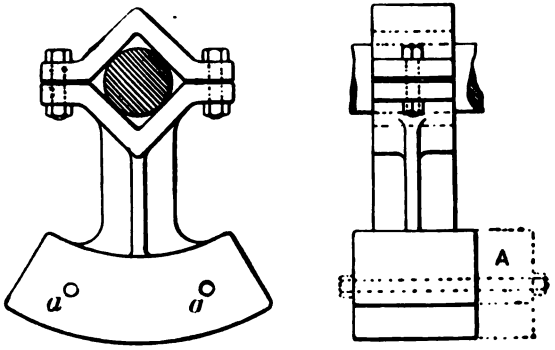

Fig. 124.

finished size. The reason is that cranks are liable to spring on the removal of the material about the webs, due to the relief of tensions in the fibres.

Probably the forging will not alter in form $\frac{1}{16}$ in., but that is too much to risk. The re-chucking for each web takes scarcely any time, consisting merely of the slinging of the crank in the crane, or pulley blocks, over the lathe, and shifting the work round on the lathe centres.

There is a good deal of roughing down to be done before the crank-pins are got to nearly their finished size, because there is not only a great excess of metal always left in these forgings, due to the difficulty of forging the three throws accurately; but the angles are all left square at the time when the lumps between the

webs are drilled and slotted out. These have to be reduced wholly by turning, so that there is more wind cut than metal at the early stages. Then the faces of the webs have to be turned, and here again there is very much of cutting wind. In a crank of this kind there may be removed altogether 50 per cent. of metal including the lumps sawn out from the webs, before the rough "use" becomes the finished article.

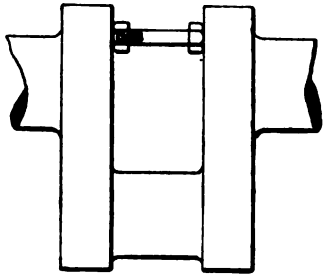

Fig. 125.

At the time of turning the axle the outer faces of the webs are also done. Nothing can be taken off the inner faces yet, but the outer edges *a*, *a*, *a* (compare with Fig. 123) are turned at the same time as the axle.

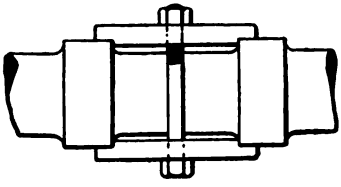

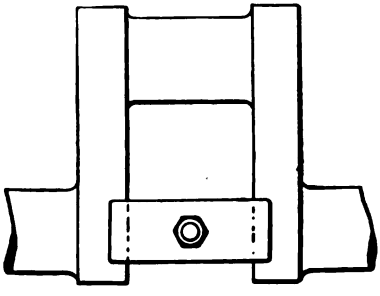

Fig. 126.

To prevent any risk of the end pressure of the lathe centres forcing the webs inwards, bolts are placed between the webs, the nuts being tightened outwards slightly to counteract the end pressure (Fig. 125). Another way which has the advantage of affording resistance over a larger area to the end pressure is shown in Fig. 126. Here two plates are shouldered to fit within the crank-webs, and are secured in that position by means of a bolt passing from side to side between the two.

After the whole of the crank has been roughed down to within, say, $\frac{1}{8}$ in. of the finished dimensions, the several portions which are turned can be finished in detail. These include the crank-pins in Fig. 121, the inner faces, and the ends *b* of the webs.

After the turning of the crank is completed, the edges of the webs have to be planed. The crank is laid on vee blocks upon the marking-off table, and each web is set level in turn, and scribed. The levelling is done with a scriber. The point of the scriber is brought either to the top, or bottom edges of the already turned portions, allowance being made for the difference in radius of the crank-shaft and crank-pins, while the central plane of the crank is level with the table. Then the width of the web is measured and scribed along parallel with the table, and centre-popped ready for planing or shaping, either method being adopted, according to which happens to be more convenient in the shop.

When a crank has its pins forged, if there is any doubt respecting the three pins and the axle all holding up to size, the crank can be set by its axle on vee blocks, and the pins checked. It is generally quicker, however, to put on the chucking plates (Fig. 123), and centring each pin separately in the lathe, run it round, and test with a narrow cut set in with the roughing tool. Then it will often be possible, by shifting the plates round a little, to average any differences in the size and centres of the three pins. But smiths are expected to leave ample allowances for pins and webs, even though that throws a considerable amount of work on the turner and machinist. Such work is, however, nothing compared with the risk of a possible waster through scant allowances.

CHAPTER VIII.

MANDREL WORK.

Solid Mandrels--Wooden ditto—Centring—Shouldering—Objections to the Solid Forms—Expanding Mandrels—Forms of—and Utilities—Turning Eccentric Sheaves on Studs—Bolt Mandrels.

A LARGE volume of work has to be held upon mandrels for the purpose of turning, sometimes as a convenient means of holding, but often in order to secure accuracy in relation to a hole. Wheels of nearly all kinds are best finished in this manner, so that they can afterwards be depended on to run absolutely true on their spindles. The principal forms in which mandrels are made are as follows:—

The plain solid mandrel predominates in most shops. Turners accumulate a stock of these in the course of time, storing them on the end of the lathe bed, underneath in a box, or more properly, on the shelf of a shop stand adjacent. The dimensions of these for average work range usually between 1 in. and 6 in. diameter, smaller and larger dimensions being rather special. Their length is commonly from 1 ft. to 2 ft. or 3 ft. They are made of iron or steel bar; frequently, however, mandrels are improvised of wood, especially when the diameters exceed 3 in. or 4 in.

Wooden mandrels are very useful, because they can be turned up quickly; and even though wood warps, it remains true long enough for a job, or a few jobs to be done on it. It is not so heavy to handle as large iron or steel mandrels. A wooden mandrel can be driven in hard without risk of splitting light cast work, and the frictional contact of the wood with the metal is a point of value. Almost any wood that happens to be lying about is suitable, as red deal, beech, oak, apple tree, and sycamore.

Wood mandrels can be readily turned down with the ordinary round-nosed roughing tools used for wrought iron. These are handier to use in a slide-rest lathe than the gouge of the wood-

turner. No finish is necessary after the wood runs true and the diameter is correct.

Mandrels of iron and steel are centred, and driven with carrier and driver similarly to work between centres, so that it does not matter if they are reversed end for end in the lathe. In the course of time they get slightly out of truth, due to driving work on and off, to spring, and to wear of the centres; but as they can be, and frequently are, re-turned to suit different jobs, this does not matter.

A plain mandrel is shown in Fig. 127. It is turned smaller

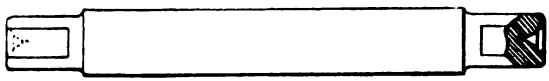

Fig. 127.

at each end, and provided with flats for the screw of the carrier to bear upon. The correct method of making the centre holes is as shown, a larger hole being drilled in a little way, from which the true angular centre commences. The latter is thus protected from the bruising effect of blows on the ends, which tends to distort the centre holes. In the best mandrels, which are hardened and ground, a very slight taper is given to the body, to enable the work to be started on and fitted nicely. To lessen the number of

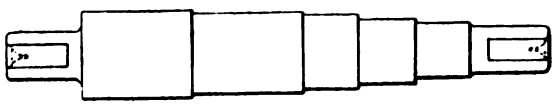

Fig. 128.

separate mandrels, stepped or shouldered ones are used (Fig. 128), which will take several diameters of bore. Slight differences in size, advancing from $\frac{1}{8}$ in. to $\frac{1}{4}$ in., are most economical of material, for it is not necessary to have big steps down at all. From three to four dozen mandrels will therefore cover the usual requirements of a lathe.

The objections to the solid mandrels lie in their lack of accommodation, since they will only take exact sizes. Holes must make a nice driving fit over them. Neither easy, nor tight fitting

will answer. In the ordinary work of the lathes, where bores have to be fixed by measure-and-trial methods, this mutual fitting sometimes runs away with a lot of time. From this drawback has arisen the demand for expanding, or adjustable mandrels, which are capable of a limited amount of adjustment in diameter. There is another advantage in using expanding mandrels in preference to solid ones, which is, that facing can be done easily on the former without cutting into the mandrel, provided the face is allowed to hang over sufficiently.

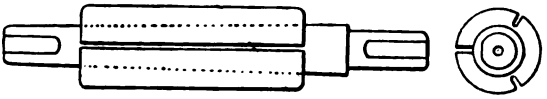

Fig. 129.

Expanding mandrels may be grouped under two heads: those of very small range, and those having a larger, though still moderate, capacity.

Figs. 129 and 130 show mandrels which belong to the first-named class. They can be inserted in holes without driving, and then expanded to fit tightly by driving the centre piece into the split bush, the two fitting by a slight taper. Accommodation for varying holes is thus attained; and though the expansion of one

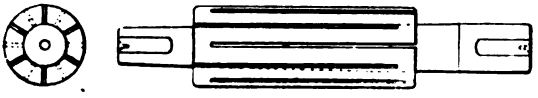

Fig. 130.

bush is only sufficient for making the difference between a perfectly slack fit and a tight one, several bushes of different diameters can be fitted to a single-tapered mandrel, so obtaining a large range of sizes. Fig. 129 shows one of this type with three cuts in the bush to provide the necessary elasticity, one only of which goes right through the metal. Fig. 130 differs in having a large number of cuts, and in opposite directions, each going right through the bush, but stopping short of the ends, to keep the bush in one whole piece. Considerable elasticity is thus secured.

The principles here embodied are very old, and they are also employed in several manufactured mandrels.

In a modified form of this type, a tapered screw is substituted for the plain plug. The chief advantage is that there is no difficulty in releasing the mandrel from the work, as there sometimes is when a driven plug sticks fast in consequence of the long taper, or small angle of taper necessary.

An incidental advantage of all mandrels of the solid, and of the bush class is that they fit around their entire circumference in a bored hole—a point of considerable importance in flimsy work, whether cast or forged, though of no particular value in stiffly proportioned pieces. It is a point akin to the use of dogs on

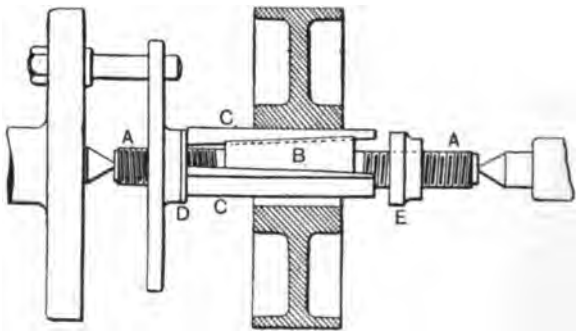

Fig. 131.

facework compared with that of the continuous contact of a turned chuck of wood, which is the best for holding flimsy rings without risk of their distortion occurring.

The second class of expanding mandrels has provision for a moderate range in diameters, obtained by sliding strips in tapered grooves. Contact with the bore is therefore not continuous.

Fig. 131 shows one of these which has given much satisfaction. The shank A has right and left-handed screws cut at opposite ends, leaving a central part plain to take the cone B. The latter has three tapered grooves to receive three blades C, the outer edges of which are expanded to fit the bore of the work by the turning of the nut D. The wings of D also form the carrier by which the mandrel is rotated. The function of the nut E is to

push the blades C back down their tapered grooves, and so release their bite in the bore of the work.

In another design, the expanding strips are coerced in the longitudinal direction by being made to fit at the ends into the sleeve, the latter fulfilling the function of a guide to retain the strips in their relative positions. The plug in this case is driven through the sleeve or bush, as in the previous Figs. 129 and 130, so forcing the blades outwards.

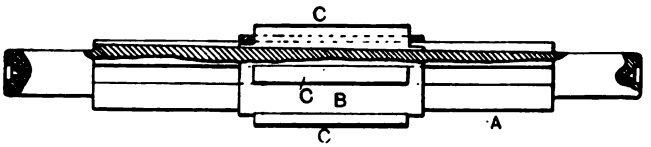

Fig. 132.

Fig. 132 illustrates the Nicholson mandrel, A being the plug or arbor, B the sleeve, and C the blades, of which there are four. In this figure the taper is imparted to the grooves, the body being parallel. In another and older design the plug is tapered ½ in. to the foot, and the blades fit upon the body of the plug instead of in grooves, as in Fig. 132. The later has now superseded the other kind, grooves being found more satisfactory.

The parts of these mandrels are fitted by grinding after harden-

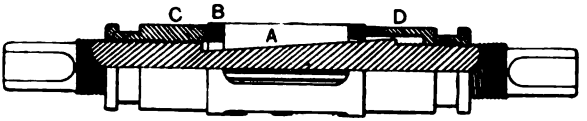

Fig. 133.

ing. The corners of the grooves at the bottom are saw-kerfed along in order to permit the blades to take a solid bearing on the bottom, even though any grit or dirt should get into the grooves. In Fig. 133 the construction is similar to the last, except that the endlong movement is effected by screws instead of by driving a plug. One screw tightens, the other slackens, as in Fig. 131. In Fig. 133 A is one of the blades, B the sleeve, C the screw used for tightening or enlarging, and D that for slackening.

Fig. 134 shows an expanding mandrel, in which three inclined slots in the body carry stepped jaws. The latter are drawn up the slots by the head, A, which turns on a square-threaded screw cut upon the mandrel, and having an annular recess which catches over the shouldered ends of the jaws, though passing over them

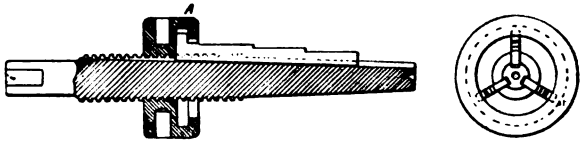

Fig. 134.

in its circular motion. The same type of mandrel is constructed without the screw, hammer driving being employed instead—having the same effect—of driving the jaws outwards against the work.

Solid mandrels are frequently driven in and out of their holes by the hammer, preferably using a copper one, or inter-

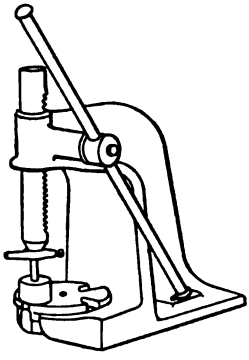

Fig. 135.

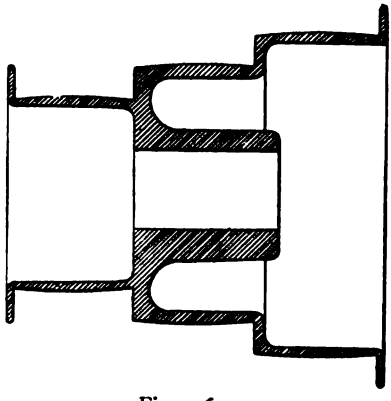

Fig. 136.

posing a block of wood or lead between the end and the hammer, if the latter is of steel. A ring support sustains the work, the mandrel passing through the hole. A better plan is to employ a mandrel press (Fig. 135), which effects the same result by leverage, and with less damage.

Mandrels, both solid and expanding, fill a large place in the turnery. Unless a hole is bored very carefully, and unless the fitting of the lathe parts is faultless, there is always a risk that outside-turned portions will show slight wabble after the job is either keyed up, or set to run loosely. The deeper the bore, the greater the chance of departure from perfect concentric

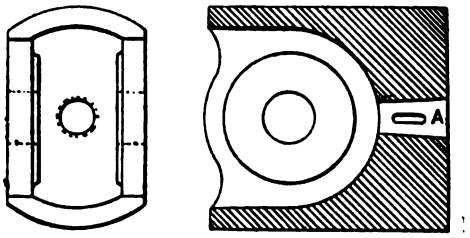

Fig. 137.

truth. The practice, therefore, is to finish the bore, rough-turn the outside, and take a very light finish-cut with the work held on a mandrel. A cone pulley like that in Fig. 136 is a case in point, where the over-all length of the pulley is much greater than the length through the boss, and a slight inaccuracy in the bore of the latter would be magnified at the extreme ends of the pulley.

Sometimes a mandrel is employed to permit of turning a portion in one chucking instead of in two. If a bush is held in the dog chuck, it must be reversed to turn its whole length thus. But if it is bored, and then put on a mandrel, the exterior can be turned at one traverse, which is always the better plan when practicable.

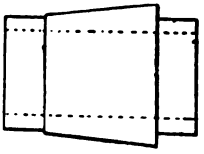

Fig. 138.

The slipper block in Fig. 137 is a job which can be finished on a mandrel, turned taper to fit in the hole A, first bored. As the piston rod has to fit in this hole, held by the cottar, the rod and the outside fitting in the bore of the guides will run truly. The slipper block is held on its mandrel by a cottar driven through the hole, which is used for attaching it to the piston rod. The alternative is to turn it on its own rod.

The bearing neck in Fig. 138 stands for a class of jobs that

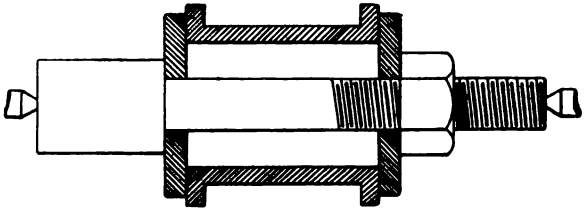

Fig. 139.

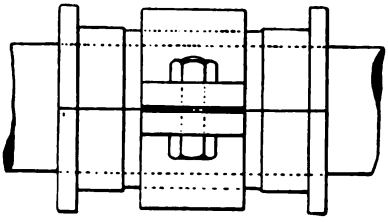

Fig. 140.

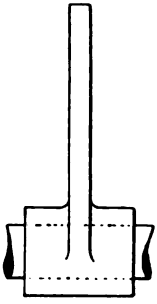

Fig. 141.

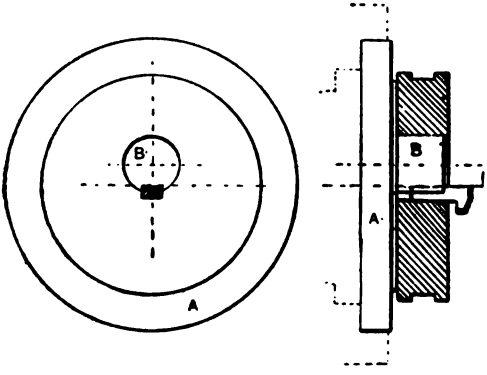

Fig. 142.

can be turned and threaded on the outside at one chucking on a mandrel.

A special form of bolt mandrel is shown in Fig. 139. This is very commonly used for the purpose illustrated, for holding

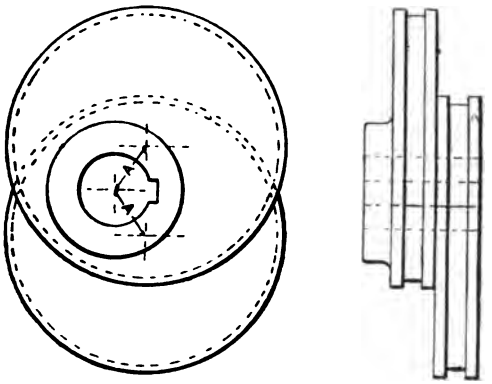

Fig. 143.

brasses, &c., endwise on their flanges. The screw being long accommodates brasses of different lengths. Fig. 140 shows a clip encircling the body of the brass, a device in which a plain mandrel is utilised.

In Fig. 141 a lever is driven on a mandrel, for the turning and facing of its boss.

In another class of job the mandrel takes the form of a pin or stud on a plate, held, not between centres, but on the face plate or dog chuck. Thus Fig. 142 shows a disc A cast with the pin B to turn eccentric sheaves on. The sheave could not be finished on its periphery at one chucking if held in any other way. The amount of eccentricity required is imparted to the pin, so that when A is chucked concentrically, B takes care of the truth of the sheave. Also the key in B serves to hold the sheave without any further aid.

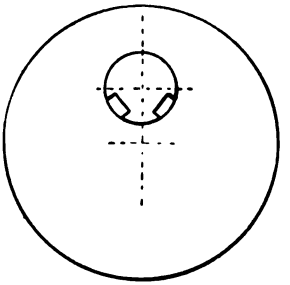

Fig. 144.

Fig. 143 shows a double sheave which is turned similarly on

the plate (Fig. 144). The disc in this case is set to run truly, held in the dogs of the chuck, and both sheaves are then turned without altering the position of the chucking plate in the dogs. The amount of eccentricity given to the pin equals the radius A in Fig. 143, and two key grooves are cut in the pin at angles formed by the radii A, A. First one sheave is turned, and then the key is withdrawn, the eccentric sheaves slid around on the pin to bring the key groove opposite the second keyway in the pin, and refastened. Then the second sheave is turned. The boss will have been turned at the same time as the boring of the hole.

SECTION III.

WORK SUPPORTED AT ONE END.

CHAPTER IX.

Face Plate Turning.

Chuck Work compared with that between Centres—Conditions essential in Chucks—The Face Plate—its Relation to the Chucks—its Great Utility—Attachments to—Arrangement of Slot Holes—its Fitting to the Mandrel—and Care in Use—Principles of Clamping Work—Spring—Bedding—Packings—Clamping Plates—Loose Jaws—Wood Blocking—Re-chucking—Alternative Methods—Examples—Work held between Face Plate and Movable Poppet—Face Plate as an Intermediate to Chucks—Magnetic Chucks.

FOR supporting work that is carried by one end, or face only, the point centres give place to the numerous appliances that come under the denomination of face plates, and chucks. When a chuck is mentioned, that appliance is always understood in which the work is gripped at one end only, as distinguished from the point centres.

The infinite variety that exists in the forms of pieces of work, and the fact that many have to be re-set in changed positions, in order to complete the operations performed upon them, are the reasons why so large a number of chucks, and chucking appliances are used. The rapid, secure, and suitable gripping of pieces of infinite variations in form is one section of the work of the turner, of equal importance with the actual cutting operations. Rapidity in effecting the grip makes for economy, and this is a matter which counts for a good deal. Security is essential, otherwise the piece may become dislodged, or shifted under the stress of cutting. By the term suitable is meant that which will neither distort, nor fracture the work, nor interfere with the freedom of

action of the tools. It is in proper chucking of awkward pieces that the difference between skilled and clumsy men largely lies.

If, however, we consider the work of the engineers' turnery, we see that, as of old, there are three or four broad types of chucks that predominate, to the almost complete exclusion of others. They are the face plate, the dog chuck, either of independent, or self-centring type, the box body, two-jawed chuck, and the drill chuck. Each of these, though employed for general work, has yet its own special adaptations, the sub-types are very numerous, and their dimensions still more so. In these, as in other details of lathe adjuncts, specialisation is a growing feature, certain high-class chucks being the productions of a few firms only, while in brass work, and turret work a few forms are designed only for holding certain classes of objects.

To support work between centres is easy by comparison with gripping it at one end only. For, unless a chuck holds very securely, the stress of cutting will cause the work to become sprung or shifted. And in the modern practice of turning metals when it is not unusual to have a depth of cut of half, or three-quarters of an inch, the need of strong chucks is even greater than ever. The result is that many improvements have been made over the older forms, both in regard to gripping power, and to durability.

In turret practice, a regular device is to grip the bar which is being cut at both front and back ends, to which device the hollow spindles, and in some cases, the thoroughfare holes in the turrets of these lathes are eminently adaptable. But outside of bar work, as it is termed, such a device is not practicable, and therefore chucks must be made strong enough in themselves to hold the work by a grip at one end only.

The conditions which are essential in the construction of a chuck that will fulfil these and other requisite conditions are the following:—First, a sufficiently strong body, jaws, and screws, or other operating mechanism. Second, accuracy when new, and its retention under severe and prolonged duty; general, and special adaptabilities to the varying requirements of shop practice, convenience, and readiness of manipulation. Though this may not seem a formidable list, yet it is so in fact, as is evidenced by the great variations which exist in the designs of chucks, and by the experience of those who have had to use them.

The face plate, and the jaw chucks are the sheet-anchors of the ordinary turner. There is no common job that cannot be held in a lathe equipped with these two types, with an angle plate or two thrown in. The face plate is adaptable to almost any job, affording, so to speak, a clean slate, on which the skill of the turner finds complete scope for the scheming of various methods of fastening. The uses of the jaw chuck are more limited, being confined to internal, and external grips. Though these cover an immense range of work, they do not meet the case of a great number of pieces of irregular shapes, nor of that large volume of work that has to be turned right across the edge at one setting.

There are two kinds of face plates, the small plate, which is the intermediate between a chuck and the mandrel nose, and that to which work is attached directly. The latter, the face plate proper, may, or may not be a chuck. It becomes a chuck when work is attached to it directly by bolts or dogs. It is a face plate simply when it becomes the intermediate connection between an actual chuck and the nose of the lathe spindle. It is as a chuck we have to consider it here.

It is the elementary form of chuck, which is mainly adapted for gripping flat pieces of no great thickness, as distinguished from those in which the length generally exceeds their diameter or breadth. It is also excellently adapted for holding pieces of irregular form.

The face plate, as a chuck, has bolt holes cast through it, variously arranged for the attachment of holding devices. These are often simply bolts, and they clamp the work to the face by means of plates of iron or steel, through holes in which the bolts pass. Or hook bolts are employed. The objection to these methods of clamping is that the work is very liable to be sprung out of truth thereby, and when thus forcibly distorted during turning, it springs back on its release, and remains permanently out of shape. For this reason, and also because of their greater convenience, clamping devices frequently consist of square blocks of metal with tail screws that fit into any of the slots in the face plate, and that carry clamping screws which bind the work in a plane horizontal with the face plate, thus operating in true chuck fashion.

The great and special value, therefore, of the face plate lies in the ease with which various adjuncts can be fitted to hold pieces

of all conceivable forms. In itself, the plain plate with slots does not look like an article possessing very much scope. But the slots permit of bolting up numerous attachments of various forms, comprising plain clamping plates, hook bolts, dogs of different kinds, and also movable jaws, and angle plates, besides special chucking blocks for special jobs. The range, therefore, of duty of the slotted face plate is wider than that of any other form of chuck whatever, and for this reason it retains, and must hold its place in the general turnery.

The methods of holding work on face plates resemble, in many details, those of the planer, driller, and general machinist. Bolts, clamps, dogs, and angle plates each have their proper spheres of service, but each must be used with judgment. Thus, a firm hold is an essential factor, but by no means the only one to be considered. Any one can grip a casting or forging firmly; but all metal is elastic and resilient, and the good turner keeps this fact ever in mind, the clumsy man does not, and so spoils much.

In arranging the positions of holes in a face plate, the difficulty is that it is impossible to say where bolts will be wanted. The holes have, therefore, to be planned to the best of one's judgment, and many workers keep two or three plates with a widely differing arrangement of holes. The usual design is that of radial slot holes of various dimensions, with a few square ones at available spaces. Sometimes square holes predominate over the slotted ones, or else the latter are very short. This arrangement does not afford such a range of utility as does the first named. The objection to inserting a large number of small holes is the weakening effect they have on the plate. But the greater objection to them lies in their inconvenience when shifting bolts about to suit the work, in which instances the bolts have to be taken right out of the holes and reinserted in others. A long slot avoids this waste of time, as the bolt can be moved along to the position desired.

Figs. 145 and 146 illustrate good typical arrangements suitable for the smaller, and larger plates respectively. Because of the thickness necessarily imparted to the largest plates, tee slots are preferably cast in to a distance of several inches from the periphery (Fig. 146), and oblong slots occupy the central areas. Sometimes the latter are omitted, and tee-grooved slots alone included, being more specially adapted for the heaviest class of lathes. The

advantage of being able to insert tee-headed bolts from the out side, and bolts, too, that will not turn in their slots, is obvious, as also is that of continuing the slots to the centre, as in Fig. 145, in which bolts of any length may be placed in position without having to remove the face plate from the lathe, as would be the case in passing a long bolt through a plain slot from the back of the plate. In Fig. 145 both tee and plain slots are provided, the sectional view showing the tee section in the upper half and the plain slot below, taken through the dotted line. Carrying the tee slots right to the edge also enables a bolt to be placed out nearly to the full diameter of the plate, which cannot be done with the other slots.

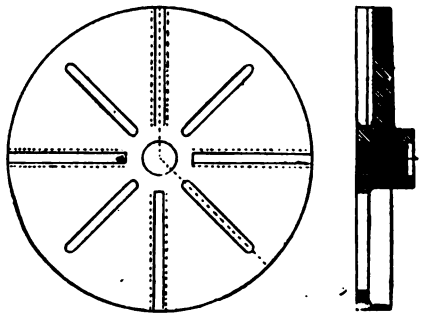

Fig. 145.

Another type of plate has curved slots (Fig. 147), which permit of adjusting the bolts over nearly the entire surface of the plate by sliding them simply. The end of each slot overlaps the next one on a radial line. When angle plates have to be attached, a plate should have a couple of parallel slots. A large variety of designs of slot holes are variously arranged in plates, according to the tastes and ideas of the designer, but they are simply variations on the patterns here shown.

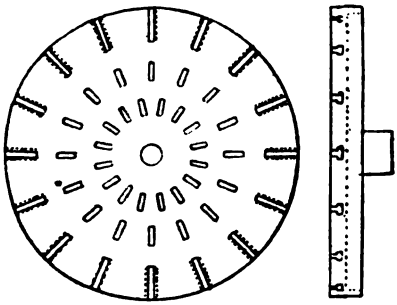

Fig. 146.

All face plates, excepting those of very small diameter, should be recessed on the back, and stiffened with an annular flange, in

the manner shown in Figs. 145 and 146. This enables them to resist distortion due to clamps.

As the plate is the basis for the work, no matter in what way it is gripped, it must be trued up in place with a fine finishing cut. A matter of no less importance is the fitting of the screw-thread and the method of its use. The trouble is that after a while this begins to lose its first accuracy, due to the wear of the screw, and of the shouldered portion of the mandrel and the boss face. To diminish this is the object of having shoulders of decent size, and screws of coarse pitch, and in some designs also leaving a portion of the nose unthreaded, and plain, as being less liable to wear unequally than a thread.

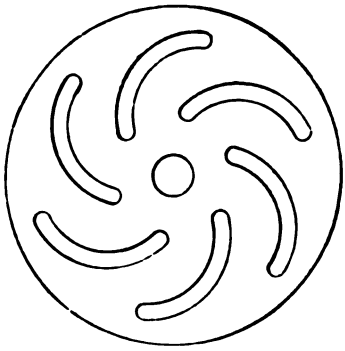

Fig. 147.

Care in use delays wear. A plate should never be run on forcibly, nor, if it becomes jammed tightly should a hammer be employed to start it off, but leverage only is the proper means to employ. A plate ought to be merely tightened by the pressure of the hands on the periphery, and loosened in the same way. Any grit or dirty oil must be wiped off the threads before screwing on a plate, and nothing hard should be allowed to come into contact with the boss face, or thread. With care, a plate once true will remain so for an indefinite period.

A workman can increase his stock of plates by making a plain pattern for casting from. The chief point to remember is that the face should be cast downwards, and the prints for the slot holes must therefore be nailed on that face. Core boxes should be made, if accuracy in the dimensions of the holes is desired. The plain hole for the thread can be cored; but in the smaller plates it is better to leave the boss solid, and drill out the metal entirely.

Iron and brass are elastic, and yield under the pressure of bolts and plates, unless adequate support is afforded in opposition to the bolts.

When a piece of work is clamped on its face by plates and bolts,

the first essential is that its bedding shall be absolutely perfect. The flimsiness of the piece clamped matters little in some cases if it beds properly. It may, however, matter in the case of cast-iron flanges, which are liable to fracture if clamping is done in this fashion. Two leading conditions must always be observed: though the work must be clamped securely, its distortion, or fracture must be avoided. The combination of both these conditions is often difficult of attainment by reason of the flimsiness of the work held.

As a rule, the possible spring of a face plate under the pull of bolts may be neglected. Any decent plate should be able to withstand this. If anything springs, it will be the work. From this point of view we have two main methods open—pressure applied perpendicularly to the face of the plate, and that parallel with its face. These two cover nearly all cases, and correspond with the use of clamping plates in the first case, and of dogs or pinching screws in the second. Just which to use in either case is a matter for judgment, and depends mainly on the shape or proportions of the work.

In the first place, when using clamping plates, a face that has been first turned or planed can be pulled down hard with perfect safety, even though the flange, rim, or lug, or any other portions which receive the pull of the bolts, are thin. If, however, the surface next to the plate is rough-cast, or forged, a flange or lug, even though thick, runs the risk of being bent or broken by the clamping bolts. In such cases packings must be inserted in the open spaces between the work and the plate, under or close to the bolts, and of such a thickness that they will just fill up the open spaces. Bits of tin, zinc, square rod, flat iron strip, hard wood end grain up, or anything that is not sensibly compressible will serve.

Clamping plates should be level, or nearly so; or, if out of level, they should slope in opposite directions, to equalise the strain. The selection of suitable packings to bring the plates quite level would frequently take more time than the job would stand, and generally a slight departure from parallelism is of no moment. It only affects the minute settings of work for exact centring, which are not so readily done when the plates do not bear quite level as when they do.

To manipulate packings, plates, and bolts all at once is often troublesome. Each bolt in turn has to be just tightened up with

the fingers sufficient to hold, while the work is tapped with the hammer to effect its minute adjustments. Sometimes, therefore, clamping plates are bent round at one end to form the packing as well, and if a large stock of these is kept, this is a good plan (see Fig. 156, p. 136).

Plates are made adjustable to accommodate work of various thicknesses. An old form is that in which the plate takes screws of different lengths, and so covers a wide range of thicknesses without the use of packing blocks, which are dispensed with by fitting a screw at the end, so that the height of the plate may be altered to suit the work.

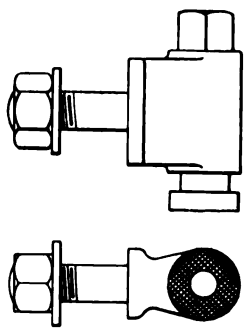

Fig. 148.

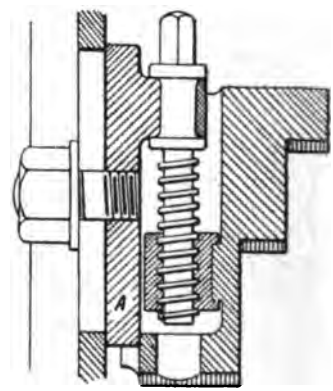

Fig. 149.

In some cases a plate will bridge a piece of work, in others, holes in the work permit of the insertion of a bolt, the washer of which then forms the plate. The fixing of various jobs requires different dispositions of the plates.

The dogs used for clamping edges include many forms, some being familiar, others not known so well as they ought to be. The commonest are crude chuck dogs, or jaws considered with regard to their mode of operation. The body of the appliance is bolted to the slot in the face plate, and the screw is pinched against the work (see Fig. 153, p. 134). The objection to this is that the end of the screw turns against the edges of the piece being clamped, or of the packing pieces used, and may cause them to shift. A better design is that in which a contact piece or cap is

used on the end of the screw (Fig. 148), similar to the ends on joiners' clamping screws, which illustrates a Continental design.

But the best is that in which loose jaws are bolted to the face plate (Figs. 149 and 150), like those of common jaw chucks. They are bolted in any required position on the plate, and the jaws are operated similarly to those of common chucks. The screw is carried in the seating block A, which is attached to the face by the bolts as seen. This, therefore, converts the face plate into a true dog chuck, three, or four of these blocks being used. The difference in the two illustrations is, that in the first, the jaw screw passes through a nut; in the second it takes a bearing along the entire length of the jaw, engaging with a portion of

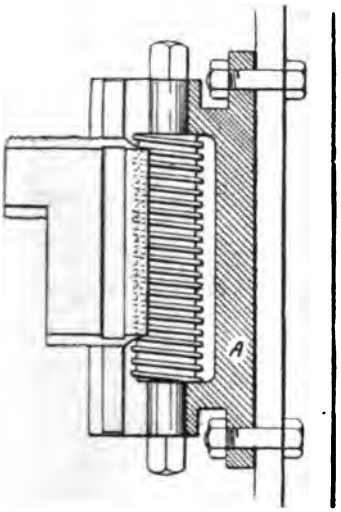

Fig. 150.

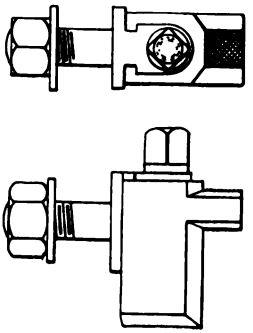

Fig. 151.

the circle. The latter is also readily reversible, being run out by turning the screw, and turned round for running in again. Fig. 151 is a reversible jaw used on French lathes.

The question of re-chucking arises in many cases. Speaking generally, it is desirable to do all the turning and boring on a piece of work at one chucking, if such is practicable. This, however, is frequently impossible, or else injudicious; but many cases arise in which this can be done, and time be saved, by the exercise of judgment.

Another everyday fact is that most jobs admit of alternative methods of working; and it would often be impossible to say

that one is right, and the other wrong, or that one is better than the other. Frequently the choice is determined, not as an abstract matter, but by the lathe and its appliances, or by the aptitude and practice of a workman. But the margin is not very wide here, and in most jobs it is easy to select the better of alternative methods.

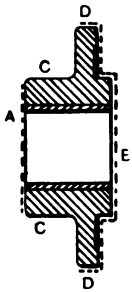

Fig. 152.

Fig. 152 is a plain job, a dead eye bearing, bushed to receive a shaft of a crab, or crane, built with plated cheeks. It is turned on the portions indicated by the dotted lines, and bored to receive the brass bush, and the bush is bored. Two chuckings are required here, because opposite faces have to be turned. This can be done alternatively with dogs, or with clamping plates; but as dogs take rather less time to manipulate, it is better to use them in this example.

First, the face A can be laid next to the face plate, dogs being pinched against the edge C, while the hole is bored for the bush. The bush being then inserted—the job being removed from the chuck for the purpose—the boss is re-chucked without alteration in position, the bush bored, and the face B turned. Alternatively, of course, the bush may be already bored separately, and simply inserted in place. The boss is now turned round and re-chucked, with dogs pinching the edge D, and the remainder of the turning done. There is no reason why the sequence of turning should not be reversed, the face A being turned first and utilised for chucking by; but in that case C should be turned—which is not necessary. An alternative would be to re-chuck on a mandrel, but there would be no advantage in doing so in a case of this kind.

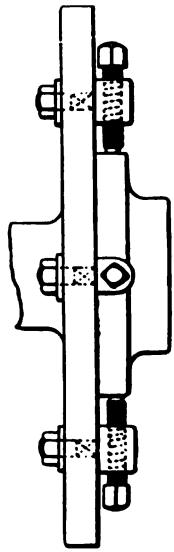
Fig. 153.

The dogs used in jobs of this kind may, of course, be those of a jaw chuck, or the loose dogs fitted to face plates. A method of gripping similar to that just illustrated is shown in Fig. 153, being a coupling boss, held on a face plate with loose dogs bolted in any convenient slots. The screws in the lugs of the

dogs are then tightened against the edges of the flange of the coupling.

The cases for clamping plates occur when there is no risk of distortion by the tightening of their bolts; when plates do not interfere with turning the parts; either not having to be turned at all, or having been already turned in another chucking; when work stands out so far from the plate that a face grip is safer than one against an edge, because holding the work more solidly up against the plate; and for other occasional reasons.

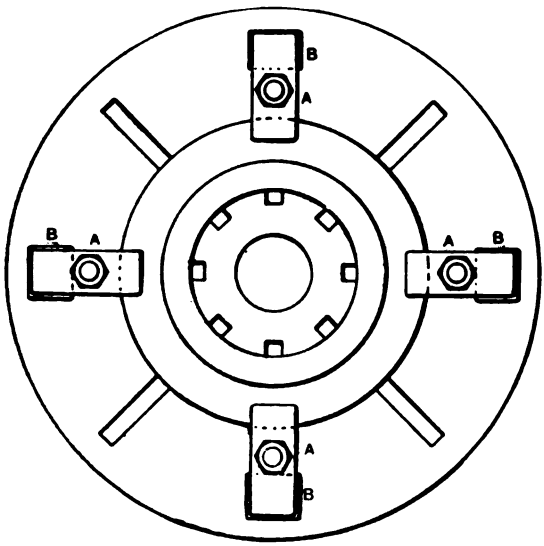

Fig. 154.

Fig. 154 illustrates a job resembling that in Fig. 153, but held with loose clamping plates A, supported on loose packings B of the same thickness as the flange clamped. Fig. 155 is another piece which is held with flat-headed bolts forming the clamp, a design which avoids the use of plates separate from the bolts, and is useful in cases where the sticking up of the nuts is undesirable. Fig. 156 is another kind of fastening where the clamping plate and packing are in one piece, avoiding separate packings, but requiring a number of grips of different depths to suit various flange thicknesses.

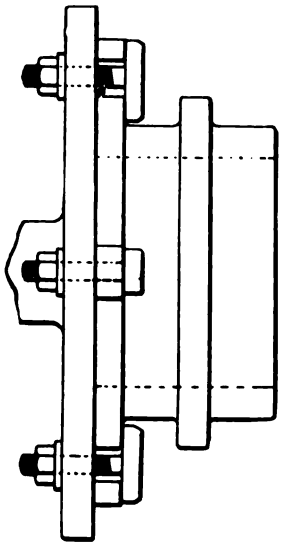

Fig. 155.

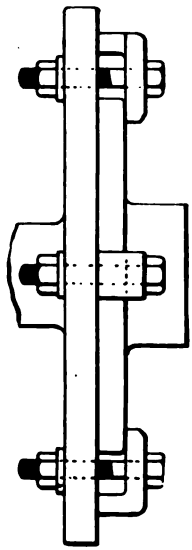

Fig. 156.

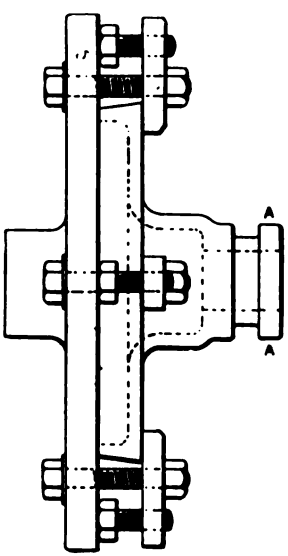

Fig. 157.

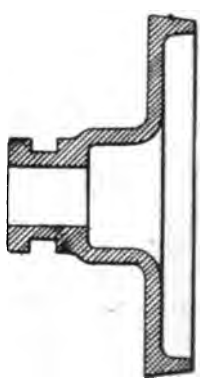

Fig. 158.

Fig. 157 is a useful form of clamp in which a set screw forms the packing, with the advantage that it is not only a part of the clamp, and therefore does not slip out, or become lost, but also permits of effecting adjustments for thickness. As the set screw is shown, it permits of maximum adjustments for thickness; but if turned round, with the head outside the clamp, the minimum adjustments, down to nothing, can be made.

This is shown gripping a portion of a friction clutch which has to be turned all over, and bored. Here two chuckings are re-

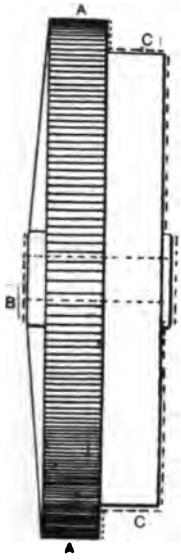

Fig. 159.

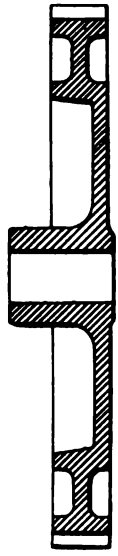

Fig. 160.

quired, and the tapered portion requires to run very true with the bore. As there is a considerable disproportion between the diameter of the two, a slight inaccuracy in boring will throw the clutch part out considerably; and if this happens, the latter will have to be finished on a mandrel. The chucking shown in Fig. 157 is the first operation, in which the hole is bored, the groove for the sliders turned, and the adjacent parts, including the broad face of the disc, as far as the clamps. Then re-chucking is better done by dogs gripping the edges A, when the remainder is turned,

including the interior, for good finish, and balancing, as far as the bored hole (Fig. 158).

The brake wheel in Fig. 159 is bored and turned over the portions indicated by the dotted lines. Dogs clip the tops of the teeth at A, during which chucking, everything is done except the boss face B, for which a re-chucking is necessary, with the dogs brought up against C.

Figs. 160 and 161 are examples of work in which dogs should grip the points of the teeth during boring and turning, and in which two chuckings are necessary. In good work, such wheels are faced right across on both sides, which prevents the use of

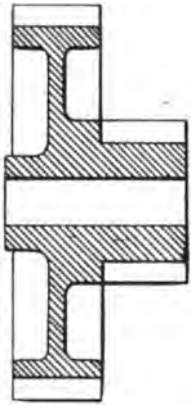

Fig. 161.

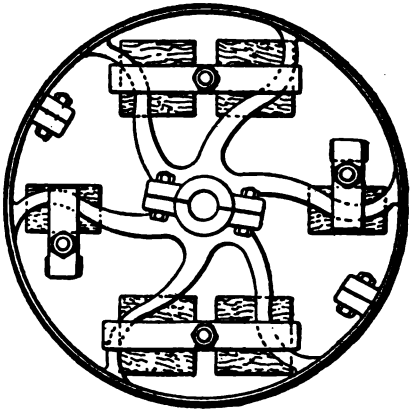

Fig. 162.

clamping plates. These are best turned in regular jaw chucks, or on face plates fitted with detachable jaws. Frequently, however, the tops of the teeth are skimmed over when castings do not come out very true, and especially when two wheels are cast together, as in Fig. 161. Absolute concentricity is then seldom present, and the teeth are topped to disguise the eccentricity which would be visible when running.

Among awkward lathe jobs, pulleys for shafting are common objects. There is a risk in handling these, of distortion, and also of fracture. When rims are light, arms must be cast light also, for heavy arms will fracture light rims, during, or subsequently to cooling. As the rim cannot be readily clamped for turning by,

pulleys are chucked by the arms in most cases. Sometimes a pulley rim is gripped in a dog chuck against the outside, the turning done halfway across the rim, the pulley reversed, and the other half of the rim turned. This answers very well when pulleys are not rounded on the crown, but if they are, the chuck jaws cannot be depended on to hold. And also when pulleys are larger than the face-plate chuck, this method is not available. The best method is then to clamp by the arms, and this is done as follows :—

Get some clamping plates (Fig. 162) with bolts to embrace each arm, or in small pulleys, three arms, also six blocks of wood, sawn off of such a length that they take the entire pull of the bolts, so keeping the pulley rim away off from the plate. Holes can easily be found in a slotted face plate to take bolts arranged like this. When the clamping plates are tightened up on the arms, they will not exercise any pressure tending to bend and fracture the arms, but will simply pinch them down on the wood blocks, and the latter against the face plate. The lightest arms can be held thus with absolute safety, and without chatter, when turning the rim under moderate cuts. The rim being off the plate, it can be turned all over, and the boss bored and faced on one side also at the same setting.

The illustration of packing shown is of course not necessarily given as of an absolute character. A separate clamping plate may be used for each arm, with two bolts, and packing. In the smallest pulleys it would suffice to clamp two arms opposite each other. The reason why every arm should be held in those of large size is that spring and chatter would occur when turning near the unclamped arms.

When bolting up a pulley cast in halves, like that shown, the plates which fill the gaps made by the splitting plates when casting, must be of the correct thickness, and the pulley measured across to see that it is the same diameter each way before commencing to turn. The plates must also bed properly, or else the tightening up of the bolts may fracture the lugs.

Pulleys are sometimes finished on a mandrel just for the purpose of giving them a final truing up. This is rendered necessary when, from some cause or other, the hole has not been bored truly, as when the drill, or bit, or lathe-boring tool has been permitted to wobble. But only a very fine cut can be taken over

the rim when the pulley is held on a mandrel, without chatter. Sometimes the file is used to impart a smooth surface finally.

A good method of holding pulleys by their arms is shown in Fig. 163. Cast-iron brackets, A, are bolted to the face plate, and are provided with set screws B, which clamp the faces of the arms,

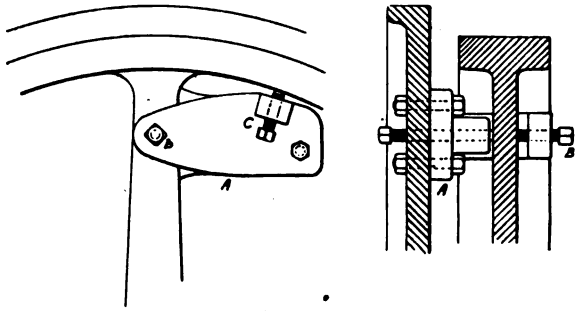

Fig. 163.

and so permit of adjustments being made, until the wheel runs true. Other screws, C, press against the inside of the rim, thus providing for concentric adjustment. When the wheel runs truly, these screws are given a final turn, and the driving thus effected. Three of these clamps are sufficient, located equidistantly around the face plate. Fig. 164 shows a special kind of driving dog for bolts, which has the merit of simplicity. A small face plate, A, drives the carrier, B, which is cranked to stand out beyond the lathe centre, so that it embraces two sides of a bolt head which is mounted upon the centres, and drives the bolt round directly the latter is slipped in place. The time and trouble of putting a carrier separately on each bolt is saved, and the operation of chucking is effected with rapidity—an essential in such work as bolt turning, where large numbers are treated.

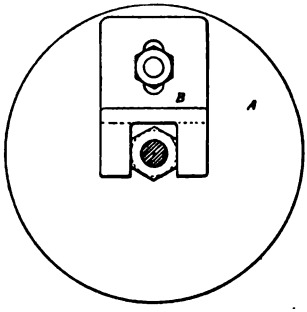

Fig. 164.

Hand wheels are familiar examples of objects which are turned on the rim and boss while held on a mandrel. The

boss is generally bored and faced first, then put on a mandrel, and the rim turned; but only light cuts can be taken, because of the risk of springing, which produces chatter marks on the rim. This may sometimes be lessened by placing wood blocks between the face plate and the rim, so that although the wheel is still on the mandrel, its rim is steadied somewhat against side chatter.

Besides the regular adjuncts, a great deal can be done in holding work of unusual and awkward shapes by the use of wood blocking. This is freely employed in engineers' shops. By cutting out vees in wood, circular portions can be bedded and held with straps, or clamping plates, which could not be securely

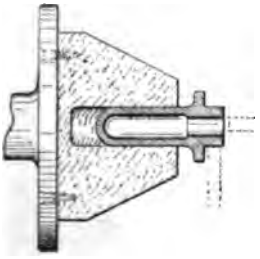

Fig. 165.

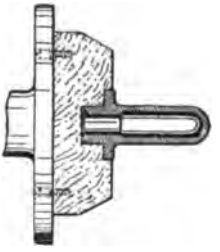

Fig. 166.

fastened to the face plate alone. To this device there is obviously no limit in reason.

Figs. 165 and 166 show how the valve-rod guides for the tail ends of engine rods can be bored and turned quite truly. They can, of course, be done in ordinary jaw chucks, and would be so treated generally. But there is less risk of damaging the work by adopting the wooden chuck method shown, and the results will be perfectly true, which is not the case if a jaw chuck, slightly worn, is used.

In the first stage (Fig. 165), the guide is shown held by its rough-cast body in a wooden chuck, screwed to a face plate. The hole for the rod is then bored, the end faced, and the outside turned and faced as far as the back of the flange. In the next stage (Fig. 166), the same chuck is turned back a little, and bored out afresh to receive the parts just turned, leaving the remainder of the outside to be finished. Support can be afforded at the rounded

end by the centre of the movable poppet, if found desirable when roughing down, being moved out of the way just before the end is finally finished off.

Wood blocking is better in some respects than metal packing, not only because it can be readily cut to fit any part, but because it is not liable to slip. Neither does it injure the work, or add sensibly to the revolving weight. Any wood is suitable, but the softer deals are easier worked for temporary service. If a chuck has to be used for several pieces in succession, a harder wood may be chosen, as beech.

Large numbers of jobs which are held by one end on the face plate or dog chuck, should be supported besides at the movable poppet end, by reason of their overhang. This proportion of

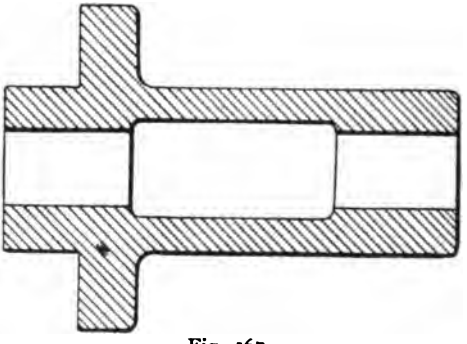

Fig. 167.

overhang to diameter is a very variable one. It depends on the natural rigidity of the piece being held. Thus, a casting having a broad flange next the face plate would not require support at the other end, as a piece of the same length and diameter, but without a flange, would. A piece tapering from the face plate might be unsupported at the other, while a parallel piece of the same length would need it. If a piece is liable to chatter, either by reason of its shape, or from the nature of the cutting done upon it, support would be more necessary than where such tendency was not present.

Fig. 167 is an example of a common job which, though of fair length, does not require any extraneous support. The dogs of the jaw chuck grip it at opposite ends in turn, sufficiently well

to permit of boring, facing, and turning. But a piece having this proportion of length to diameter is getting on the border line. In Fig. 168 we have an air vessel that has to be faced at both ends, and this, of the proportions shown, should receive support on the poppet centres, the holes being bridged with strips of metal to take the centres, by the methods described in a previous chapter, page 84. In the case of the smaller air vessels, a special cone centre might be used, but the other plan is better. Another way is to use a chunk of cast iron, tapered outside, to slip partly into the end, and centre on that. Another is to use a fixed steady or stay, within which the piece is supported, and in which it revolves, near the end situated away from the headstock. Another device for small ends is the cone plate, which, however, is chiefly used when holes have to be bored up from the end, to be illustrated later in connection with boring in the lathe.

The face plate, used as an intermediate connection between the chuck and the nose of the lathe spindle, is fitted on all high-class chucks. It is found easier to maintain the truth of a chuck in this way than to thread it directly on the spindle nose. Apart from this, it permits of the purchase of high-class chucks, independently of any consideration of the pitch or size of the thread on the spindle nose, which are then easily fitted to any lathe by the intermediary face plate. In chucks that are purchased, a recess is turned truly on the back, into which the face plate, fitted to its spindle, is turned to make a neat fit, and is then secured with screws. This method is now of almost universal adoption (see Chapter XII., page 173, for examples).

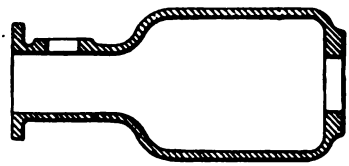

Fig. 168.

Magnetic chucks are capable of fulfilling the functions of face plates for work that is not to be subjected to any heavy cutting. They were first introduced on grinding machines, but are now manufactured as face plates for ordinary lathes by O. S. Walker & Co., of Worcester, Mass. They are made in two styles, large and small, the difference being that the latter (Fig. 169) are provided with tee slots and stop blocks. The drawing represents the latest construction in these chucks. The main part consists of an open body or shell A, having four magnet cores B, cast integral with

the shell. Coil chambers are thus formed in which are placed the magnetising coils, wound on their bobbins D, which are slipped over the magnet cores. The winding is not shown. To this open box is fitted a metallic cover or plate E, screwed to the box, and cut out to receive the four triangular pieces F. Each piece F is fastened with two screws to the magnet boss B, beneath it. The space between E and F is filled with non-magnetic metal—brass, for instance—so forming magnetic gaps between the poles E and

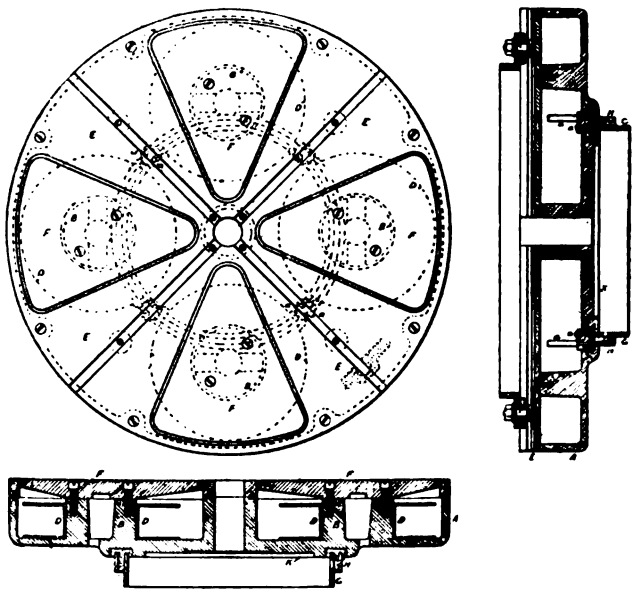

Fig. 169.

F. The whole chuck is therefore a magnetic surface crossed by eight gaps. The current is brought through a flexible wire from the supply, which in the case of these chucks is that of an ordinary incandescent lamp circuit. It is conveyed to the rotating chuck by two spring brushes which bear on the two collector rings G, H. The screws *a a*, which hold the rings on, also convey the current from them to the bobbins, as seen in the plan, one wire going from each screwhead to the bobbin windings. The insulating material *m* for the rings is seen at J, being a block by which the rings are

screwed to the body, the remaining spaces being filled with non-conducting cement between the rings. The recess at K is to receive the intermediate face plate, similarly to the fitting of other chucks. The tee slots are used to centre the work by, and also to reinforce the holding power of the chuck by preventing the work from skidding sideways. In chucking similar pieces the practice is to leave three of these blocks fast in the tee slots, and to remove the fourth while removing and inserting work, so that centring is done at once. Concentric circles struck on the face of the chuck also assist in centring.

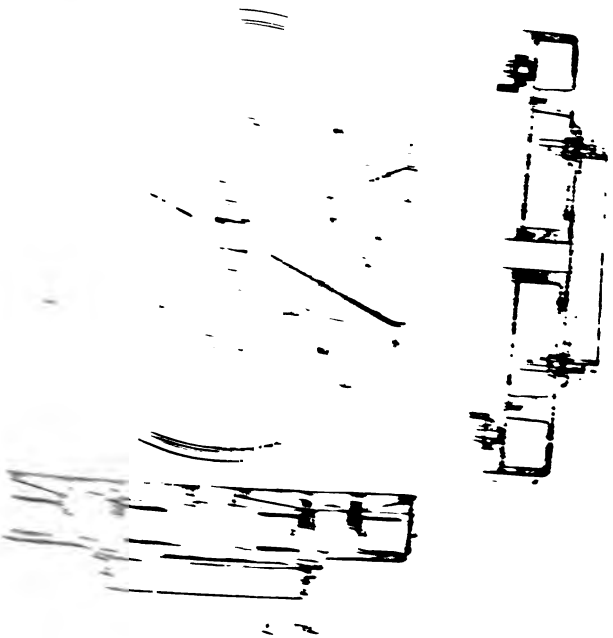

[illegible] are placed [illegible] are slipped [illegible] open [illegible] the box, and [illegible] each piece F is [illegible] The [illegible] metal—brass, [illegible] the plates E and

[illegible] a magnetic surface crossed by [illegible] a flexible wire from the [illegible] is made of an ordinary [illegible] is mounted on the rotating chuck [illegible] the two collector rings G, H. [illegible] also convey the current [illegible] as seen in the plan, one wire going from [illegible] windings. The insulating material [illegible] being a block by which the rings are

screwed to the body, the remaining spaces being filled with non-conducting cement between the rings. The recess at K is to receive the intermediate face plate, similarly to the fitting of other chucks. The tee slots are used to centre the work by, and also to reinforce the holding power of the chuck by preventing the work from skidding sideways. In chucking similar pieces the practice is to leave three of these blocks fast in the tee slots, and to remove the fourth while removing and inserting work, so that centring is done at once. Concentric circles struck on the face of the chuck also assist in centring.

CHAPTER X.

Angle Plate Turning.

Advantages of the Angle Plate—Designs of—Methods of Setting Work on—Examples—Bend—Bracket—Force Pump—Globe Valves—Bend Pipes—Casing for Hydraulic Valve.

A DEVICE which is much used for holding work on the face plate is the angle plate. It appears at first sight a rather crude arrangement, the drawback being that its mass, being always of necessity set to one side of the centre, is frequently left unbalanced. The work thus held does, in some cases, act as a suitable counterbalance, but generally in an imperfect degree; and at only moderate speeds it is generally necessary to bolt something on the opposite side of the centre to cause the plate to rotate without jerky motions. It looks clumsy, but is the best method practicable.

In pieces where feet are cast on, as in the numerous forms of valves, cocks, and cylinders, the foot is planed in the first place, and then bolted to the vertical face of the angle plate, with the certainty that any face then turned will be at a right angle with the foot, or that a hole bored will be parallel with it. If a second chucking is then required, parallelism is ensured between turned, or bored portions, or correct right angles.

The angle plate thus immensely increases the utility of the face plate. There is scarcely any limit in reason to the awkward shapes than can be bolted to it—shapes that in many cases could not be gripped firmly and steadily on the plate alone. This appliance is less used for turning than for boring and facing. In the jobbing shop, therefore, it takes work that would, in the highly specialised shops, go to the boring mill, driller, planer, shaper, or milling machine, to be done in large quantities. A good deal of time may be spent in rigging-up, but that counts for little by

comparison with the advantages gained. When a hole has to be bored, as well as a face tooled, it is in most cases better to perform the two operations on the lathe, rather than divide them between lathe and planer, or, say, shaper and boring machine, drill, or mill. It is a good rule that two settings of work should be avoided if one will suffice. When pieces of very irregular forms occur—and these embrace large numbers of castings and forgings that have to be held for turning—the face plate, equipped with suitable dogs and angle plate, is the proper appliance to use.

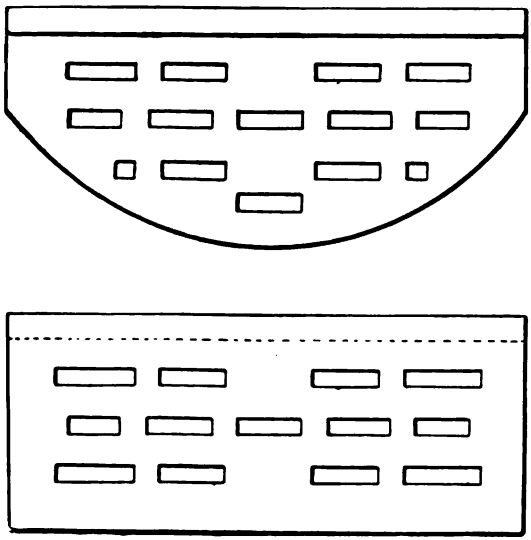

Fig. 170.

Slots can be differently arranged in different plates, as in Figs. 170 and 171, some longitudinally, and some transversely, each being more convenient than the other in different jobs that require adjustments for centring them by. Brackets are often inserted in the ends of angle plates of large size, as in Fig 171, but are generally omitted from the smallest ones, not being necessary in these.

Angle plates for most machine tools have parallel flanges, but many of those for lathes have one flange cut to a curve as shown, approximating to that of the face plate, on which they are

mostly used. This is done to prevent risk of corners catching. The mass of the plate should be counterbalanced by bolting a boss or a distance piece on the face plate opposite to the angle plate.

Each face plate of different size can with advantage be fitted with its own angle plate; and in time these plates will accumulate, as those of varying proportions in regard to width of flanges and arrangements of slots are made for different jobs—two or three, perhaps, to go on the same face plate. The usual form is one in which each flange is of the same width; but it is convenient to

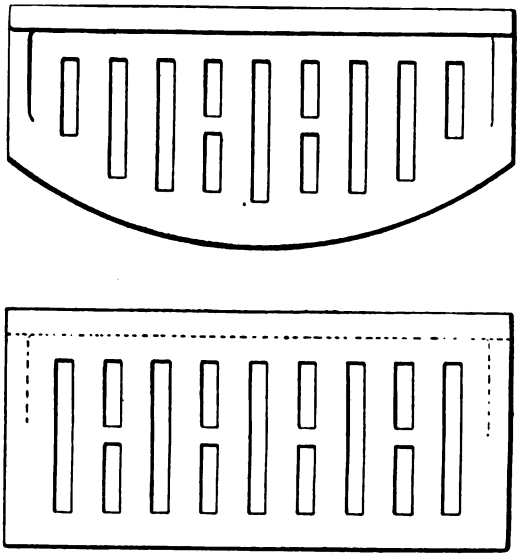

Fig. 171.

have some made with flanges unequal for jobs that have to stand out a considerable distance from the plate, such as some forms of force pumps and hydraulic pressure pumps.

Any means of attachment which is used on a face plate can be adopted also on the angle plate. These include plain bolts, hook bolts, and movable dogs of the various forms previously illustrated. These go on the free face of the angle plate; the other face is bolted to the face plate with ordinary bolts.

A simple example of angle plate work is shown in Fig. 172.

One flange with its check, which may, or may not be previously turned, is bolted to the angle plate for the turning of the other flange and check. The mass that lies to one side of the centre is counterbalanced by a loose weight bolted to the face plate.

Either of the faces of an angle plate can be utilised to receive the work, provided they are machined up truly. It is often very desirable to be able to reverse the angle plate, as in Fig. 173,

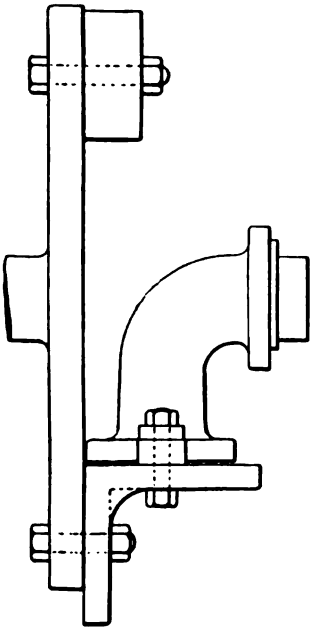

Fig. 172.

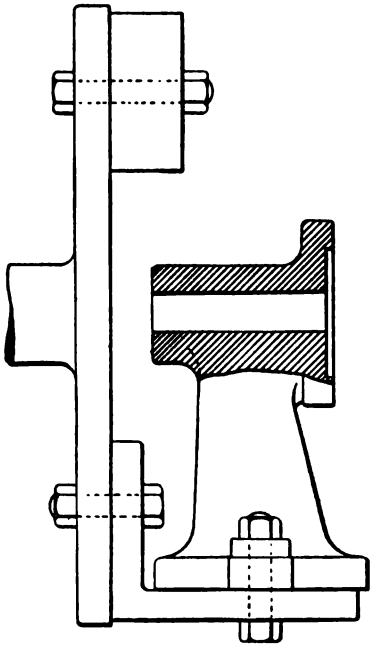

Fig. 173.

in order to take deep work, which otherwise would not allow the angle plate to be bolted up to the face plate.

This example shows a tall bracket bolted to the inner face of an angle plate directly—that is, without using any packings. The base is supposed to have been planed first, and when the boss is faced and bored, it is bound to be parallel with the base.

It is also clear that any piece of work having faces or bores that are required to be at exact right angles with each other can

by successive chuckings be tooled without any checking for the truth of these angles, by using the angle plate. It is necessary, however, to start with a machined face; or if this is not available, one face must be trued in the lathe, and the rough face first attached may then have to be packed, or the work adjusted to average inaccuracies that may be present in the rough casting or forging. And besides this, work can be chucked to do faces that stand perpendicularly to the first set, an example of which would be a cubical piece requiring tooling to be done on each face.

In cases—which are not infrequent—where there is no flat face available to go either next the angle plate or the face plate, the work has to be packed up. And when this becomes necessary, scribing

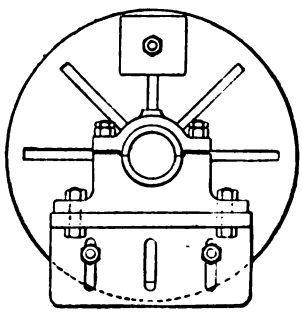

Fig. 174.

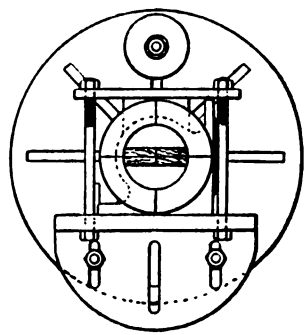

Fig. 175.

blocks, internal calipers, compass calipers, squares, and the regular devices of the liner-out have to be employed. These will be worked by the centre lines on the job, or to faces and edges already tooled. The faces of the face plate and the angle plate become then the bases from which these instruments are used, being employed just as the marking-off table is by the liner-out.

Figs. 174 and 175 show a plummer block, and an engine cylinder respectively, being bored and faced, on angle plates. Engine crossheads are sometimes treated similarly.

Figs. 176 and 177 illustrate the chucking of a force-pump body on an angle plate, by means of its foot.

The first work, on receipt of the casting body, is to test the cored holes in relation to the external diameters, and to the foot

A. Then the holes are lined out in such a way that inaccuracies will be averaged between them. They are bridged with wood. The centre plane *a a*, of the holes to be bored is scribed with the casting blocked up, and while in that position the edges of the foot also must be scribed round for planing its face by. The vertical centres for the bore are scribed, and the bores next the outer faces of the flanges struck with compasses.

The first part to be tooled is the foot A, which may be shaped, planed, or milled. This is the basis for the subsequent work. The two bolt holes *b*, *b*, are now drilled to hold the foot to the angle plate, which will now be bolted to the face plate, and its distance from the centre adjusted to bring the centre plane *a a*, of

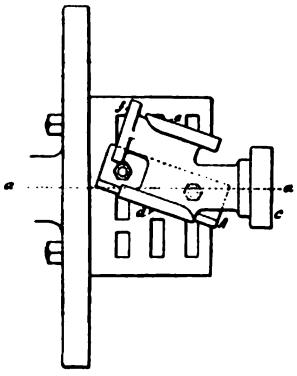

Fig. 176.

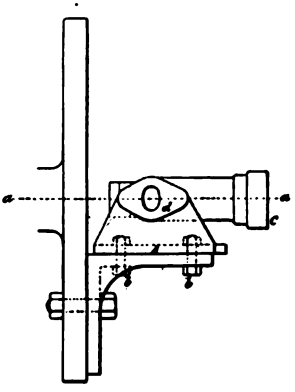

Fig. 177.

the pump bores in the centre of the lathe. At this position the plate will be permanently held, but there must be four separate settings of the pump body in this plane, to do the various borings and facings of the different parts. There must be plenty of holes in the face of the angle plate to which the pump is bolted. Or, in some cases, that face may be left blank, and holes be drilled to suit the various positions of the body or other piece of work.

To set the pump body for boring in next each flanged face, it is clamped temporarily, and the lathe run round by hand until the point of a scriber held in the hand, or in the slide rest, indicates the concentric running of the circle struck upon the flange face.

The concentricity of the internal portions, away from the outer face, may be tested with a scriber, or by the boring tool passed within the body while the work is revolving, or by noting the truth of the running of the outside circular portion. When the setting is found to be correct for any one portion, the body is bolted firmly in that position, and the boring proceeds. This should be done from the slide rest, though it is practicable to do it with hand tools, in gun-metal. The flange faces must be turned at the same chucking as that in which the boring is done. At one chucking the bore *c* and face adjacent will be done. This position of the work is shown in Figs. 176 and 177. At another chucking—the angle plate always remaining fixed, and the pump merely swivelled upon its face, —the bore adjacent to, and the face *d*; at the third, the bore and face *e*; and at a fourth chucking, the bore, and face *f*. After this the body will be removed from the lathe, and the gland, flanges, and valves will be taken in hand.

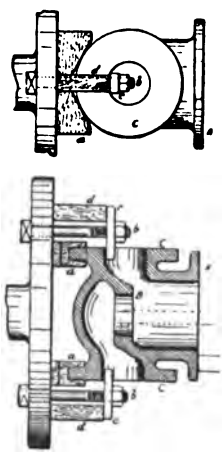

Fig. 178.

A globe valve for steam or water (Fig. 178) is a very common object, made in various forms and many sizes. The principal variations are in the ends, which are either provided with flanges for bolts, or with hexagons, and screwed internally for pipe. This need make no difference essentially in the method of chucking. In either case, whether the ends are screwed or flanged, three chuckings are necessary. In all work of this kind a great deal can be done by the aid of wood packings and angle plates.

Taking a flanged valve first (Fig. 178) the flange A and the seating B had better be done before the ends. The figure shows how the rough casting can be gripped securely. The flanges are bedded on two blocks of wood *a*, *a*, sawn either to a vee shape, as shown, or to the curve of the flange. These afford a good support to the casting, which without them would not remain steady on the face plate, having no flat surface to take the pull of the bolts *b*, *b*. The latter pass through clamping plates *c*, *c*, inserted in the ends of the holes; and blocks of wood *d*, *d*, sawn

to length, receive the pressure of the bolts outside the casting, and so maintain the clamps level.

As the casting must be made to hold up to size everywhere, even though the flanges may not have come out of the mould true, and the cored portion B may not be concentric with the flange A, the job must be run round and tried with chalk, or with the point of a scriber, on the eccentric, or "high" parts, and any inaccuracies averaged by slacking the bolts slightly, and tapping the casting lightly with a hammer, until it is got as true as is found practicable. The end flanges C, C, must be checked with a square from the face plate, and if found out of square must be put approximately right, otherwise they will, when their turn comes to be faced, be found of uneven thickness.

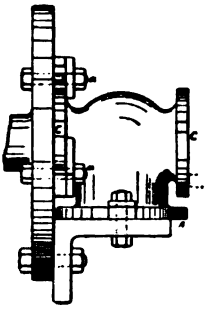

Fig. 179.

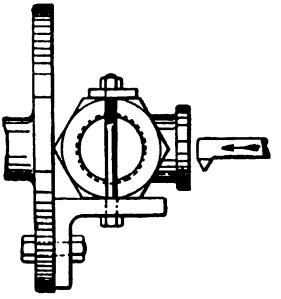

Fig. 180.

When the bolts are properly secured, the flange A will be faced, its edge turned, and the interior bored inwards for ¼ in. or ½ in. The seating B will also be faced and bored. A stiff boring bar carrying a tool point may be used for this, or a solid bent left-hand tool. Flange and seating will now be parallel, and concentric with each other—a vital point. The centre line for the bolt holes will be run round, and the job taken off the plate.

In the next chucking, the flange A becomes the guide for the truth of the others, being set at exact right angles with the face plate. This can be set simply by a square, but it is safer and better to bolt an angle plate (Fig. 179) up against it, so keeping it true while the bolts are being tightened up on the flange next the face plate, and preventing risk of the job shifting sideways.

The flange next the face plate is as yet a rough-cast face only, and therefore will not bed on the plate properly—an additional reason why the angle plate should be used. Bits of packing, or a sheet of rubber should be inserted between the flange and the plate to prevent risk of the tightening up of the bolts *a*, *a*—three of which are used—fracturing it. In a job of comparatively small size these bolts may even be dispensed with, and the angle plate alone relied upon to hold. For larger valves, however, it is well not to trust to this alone; hence the reason for the face plate clamps. The truth of the flanges must be tried by running the face plate round, testing with chalk, and tapping the casting until the flanges run true, then giving the nuts *a*, *a*, a final turn. The flange C, that stands outward, is now faced, and its edge turned, and the line of bolt centres run round. The third chucking does not necessarily require the angle plate, because the flange just faced is a perfect guide, its face bedding on the face plate, and its edge being set to run true.

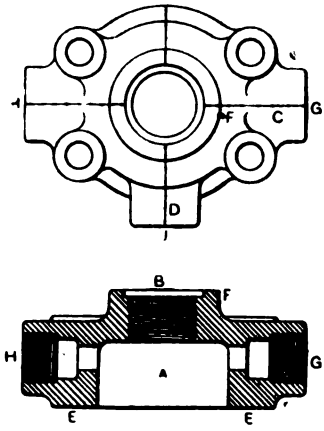

Fig. 181.

A valve body, with hexagonal and screwed ends (Fig. 180) must go through somewhat similar operations, with the addition of the internal screw cutting at each end. Fig. 180 shows a convenient method of chucking without wood blocking, an angle plate receiving the flats on one side of the hexagon, and the pull of the bolts on the flats opposite, the clamping plate passing right over the ends, and needing no packing. The ends will be faced, though there are no flanges to turn, and an angle plate may be used against the flat-faced end, as in the example just given. The circular truth of the casting can be checked when run round on the plate by a scriber touching the angles of the hexagons.

Fig. 181 illustrates a casing for a hydraulic valve, which, unless done in some considerable numbers, would be best tooled by the assistance of the angle plate. The only holes that are cored are those at A and B for the valve, and for the tightening nut

on the top of it. Five chuckings are required, two of which can be done on a face plate, or independent dog chuck direct, for the holes A and B, the other three on the angle plate. The centres are all lined out, and the two axes C and D, at right angles with each other, are used also for setting the piece by on the angle plate.

The start is made by boring the hole A, and turning the face E E, the casting being gripped by the edge of the boss F in a jaw chuck, or by dogs embracing the sides and ends of the casting. A cut may also be taken through B at the same time. The piece can then be re-chucked, being set by A and B, A being held by the external edges of jaws, or alternatively loose dogs may grip the ends and sides of the body, and the truth of running be tested by a scriber point held against the hole B, rough bored. The face of F will be rough turned at this chucking, and its recess, and the thread cut in B.

The faced part E forms a useful guide for the subsequent operations; E goes direct on the free face of the angle plate, and thus ensures that the three gland holes G, H, J, will be bored parallel with E. The centre lines C and D, when set alternately parallel with, and at right angles with the face of the face plate, become guides for the truth of the bored holes, in plan.

One of these chuckings is shown in Fig. 182, and this will suffice to illustrate all. The face E is next the free face of the angle plate, and two clips N, N, going across the bosses for the bolt holes of the body, receive the pull of four bolts K, K, which hold the body securely to the plate. At this chucking, adjustment is effected by means of the lines C and D (Fig. 181). The line D is tested with a surface gauge, the base of which is slid along the face of the face plate. The line C is checked by the blade of a square, the stock of which rests on the face plate. The minute adjustments of centre lines are obtained by slackening the bolts, and tapping the work with a hammer in one direction, and by shifting the work or the angle plate in a similar fashion in the other. The witness lines—one of which is seen at M in Fig. 182—made by the marker-off, show when the boss runs truly; and if the lines C and D are also at right angles with, and parallel with the face plate respectively, the boring can be proceeded with. The chuckings and borings for the other branches H and J are a repetition of those just described.

If a number of these castings have to be tooled, some time can be saved by bolting a circular disc of the same diameter as the hole A to the angle plate, in the vertical plane of the lathe centres. The castings can then be turned round on this, and when the lines C and D are set with square and surface gauge, the bosses will be central.

Fig. 183 shows an example of work for which the angle plate is adapted, but which does not possess any flat surface that can be bolted direct to it, or to the face plate. It is therefore a job for packings. The casting is the body of a hydraulic testing pump.

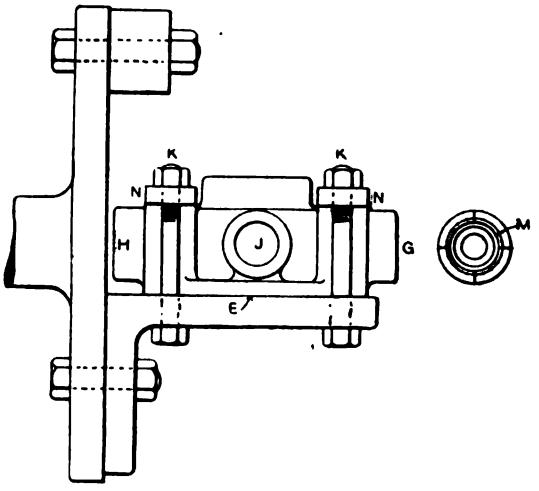

Fig. 182.

Almost all the holes are drilled in the solid, the only portion which is cored being the main hole for the ram.

At first sight this might appear a job for the drilling machine, because a number of small holes have to be drilled in from the different faces. But the numerous threads that have to be cut indicate that the lathe is the machine to use. The holes might be done in a drilling machine, and the threading in a lathe, but the double set of fixings-up would cause unnecessary waste of time.

The casting must be lined out on the marking-off table, for

the turner will require all the centres and witness lines available in the work of chucking.

The best way to start is to take the long stem first, which receives the ram. This has to be turned at A to fit in the cover of the pump box. At the same time a cut can be taken round B,

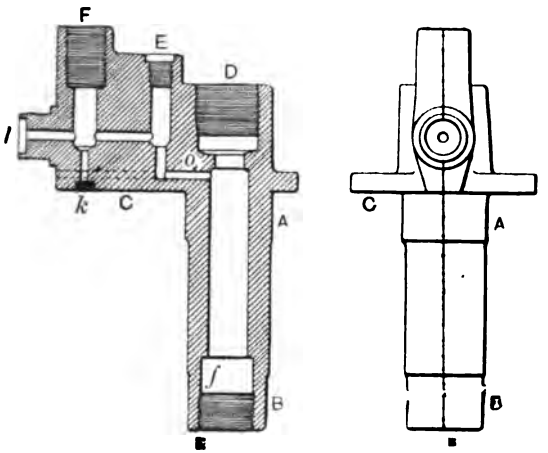

Fig. 183.

which will be an aid to re-clamping later. The face C is turned also, and this becomes a useful guide for subsequent work.

Fig. 184 shows the body gripped on the angle plate for the first stage in the turning. It is clamped with three plates H, holding the casting down on packing (not visible), and the back of the flange is kept up against the edge of the angle plate as an additional security.

To ensure having the work true, several devices are adopted. The centre lines *a*, *b*, or *c*, which correspond with the centres of the main bores, can be checked from the face plate with a square, to get them at right angles with the plate. The centre lines of the stem portions—both *a* and the one in the plane of the angle

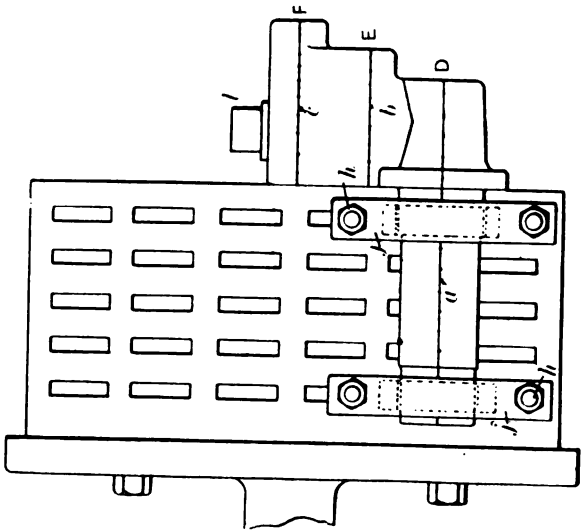

Fig. 185.

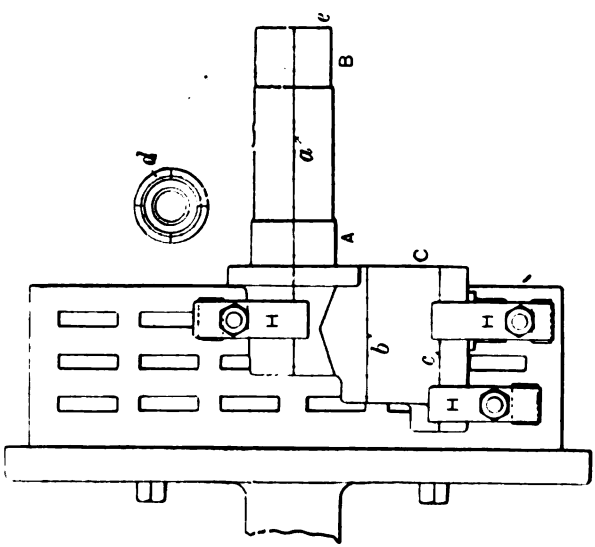

Fig. 184.

plate, will be brought exactly opposite the lathe centre, which is tested readily by running the job round, and adjusting, until the witness line *d* runs true. The back end can be adjusted with packing, until its centre measures the same distance off the angle plate at the back as at the front. This may be tested with a square set with its stock on the face plate, the blade standing perpendicularly to the angle plate, measurement being then taken from its edge to the two centres.

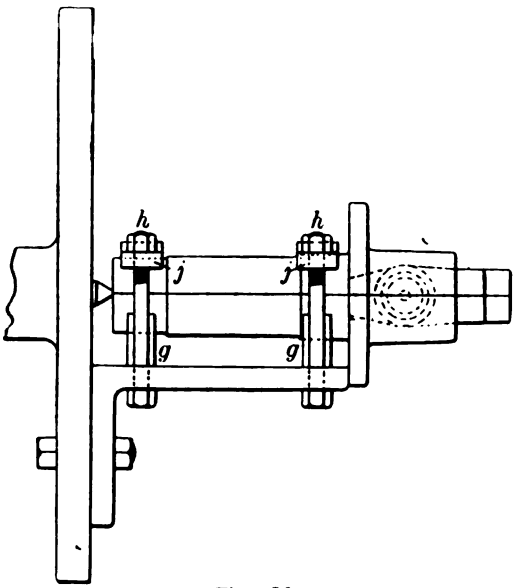

Fig. 186.

The parts to be turned at this chucking are A, B, and C outside, the face *e*, and the hole *f* (Fig. 183), a portion of which is screwed with a gas thread, after which the body is removed for re-chucking.

Figs. 185 and 186 illustrate how the re-chucking is done for boring the holes D, E, and F (Fig. 183), the arrangement being shown for F in Figs. 185 and 186. Vee blocks *g*, *g*, of wood or of metal, or blocks of wood cut with concavities to match the turned parts A and B (Fig. 183), are laid on the angle plate, and

the casting bolted down on them with bolts *h*, *h*, through plates *j*, *j*. Adjustments can easily be made then by the centre lines *a*, *b*, and *c* in one direction, testing with a square from the face plate, and in the other by measuring from a square perpendicularly to the first named. If the vee'd or concave blocks are got correctly in this way, they will be right for each chucking without re-cutting, which shows the advantage of having turned necks to lay them in. The final minute adjustments will be effected by revolving the work, and testing by the witness line around each bored hole. If these run true, and the centre lines are square from the face of the plate, the bolts can be tightened up for turning. Three chuckings will be required for D, E, and F, each being a repetition of the others, as in Figs 185 and 186.

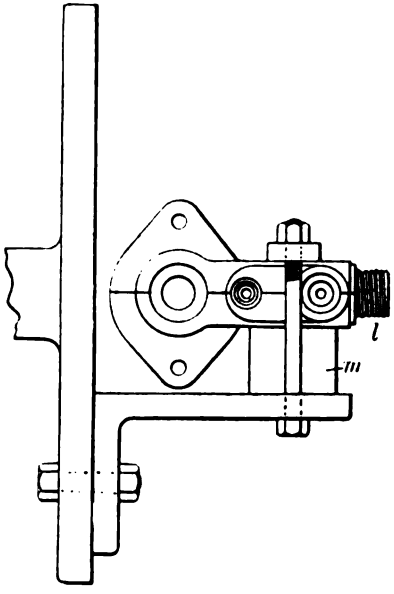

Fig. 187.

The portion *k* of the branch F (Fig. 183) will have to be done at a chucking by itself, either before or after the remainder of F is bored or screwed.

A chucking at right angles has to be done for drilling the hole *l* (Fig. 183), shown in Fig. 187. A block of wood or metal *m* supports the body, with the flange clear of the angle plate, and two clamping bolts hold it down. The centre line *a* (see Fig. 185) is then set parallel with the face plate, and the centre line of the plane of the casting parallel with the angle plate, and then when the witness line on the end of *l* runs true, the drilling can be done. The job is finally shifted along on the angle plate to bring the axis of the hole *o* (Fig. 183) true with the lathe centre. This has to be drilled from the outside, as indicated by the dotted lines, and the length shown dotted is subsequently plugged up.

CHAPTER XI.

INDEPENDENT JAW CHUCKS.

Limitations of the Face Plate—Dog or Jaw Chuck—The Place of each—General Design of Jaw Chuck—Fitting of Common Jaws—and Screws—Examples of Work done—Bevel Wheels—Clutch—Valve—Bonnet—Variations in Forms of Jaws—Internal and External—Reversible—Loose—Edges of Jaws—Jaws of Irregular Form—False Jaws—Removable Jaws for Attachment to Face Plate—Box Chucks—Grab Chucks—Bell or Cup Chuck.

THE face plate, with an angle plate in combination, fulfils within its limitations, the conditions which are essential for general shop requirements, but its utilities are confined to certain classes of work. It would be a cumbrous, and uneconomical piece of mechanism for simple circular work of almost all kinds, for pieces of considerable length, for almost anything except parts of irregular form, and those having flanges, and feet. Within these limits, however, it has no rival.

The dog, or jaw chuck (Figs. 188-190) divides favour with the face plate to a much greater extent than the concentric type does. The latter is only suitable for work that is true circularly; but the former, in which each of the jaws has a movement independent of the others, will grip circular, or irregular pieces, either concentrically, or eccentrically. Its property of minute adjustment is of great value, both when new, and when it is worn: the first to compensate for slight inequalities in rough-cast and forged work; the second to make adjustments to compensate for the wear of the jaws, and backlash of the screws.

The face plate, and the dog chuck each occupy a place of its own, as also does the concentric scroll, or geared chuck; but the first two are of the most value in the general run of turning. The dogs and clamps shown in Chapter IX. are not readily adaptable to the jaw chuck; but jaws are such valuable adjuncts to the face

plate, that a good many removable jaws are made to be bolted to face plates, thus rendering them combination types. These are not makeshifts, as some combinations are, but excellent standard forms.

The three views (Figs. 188 to 190) show the jaw chuck commonly made. The jaws hold either on the internal or external edges; grooves are turned in them to help to grip the work better; and circles are scribed on the plate to roughly centre by. The nuts at the back are slackened when a piece is to be gripped, the

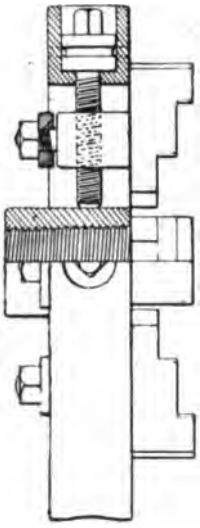

Fig. 188.

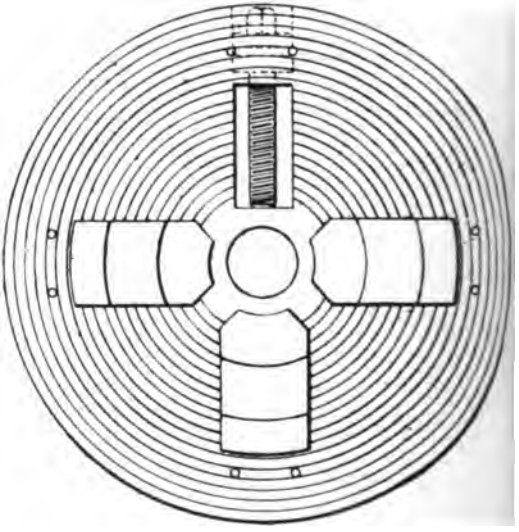

Fig. 189.

jaw screws turned to get light grips, while the work is run round and tested. It is adjusted by slackening some screws, and tightening others, where required; and when true, a final turn is given to all the screws. Then the nuts at the back are screwed up so that the clamping plates may pull up the jaws tightly against the plate, and prevent all chance of the jaws slackening back. A good many chucks are made with reversible jaws to grip small pieces. But it is better, as a rule, to have a separate chuck for such work. In the better class of plates, the jaws are sunk into grooves from $\frac{1}{8}$ in. to $\frac{3}{8}$ in. deep, according to diameter, to afford

support to them. Mr S. H. Hamer, of Halifax, fits the jaws as follows :—They are machined all over, but not fitted in the chuck, and not bored, or tapped. They are then case-hardened, with the exception of the shank, which is left soft. Then, on a special grinding machine constructed for the purpose, the back part of each jaw, in a set of four, is ground, all being made the same distance from back to front, as gauged by a micrometer. Then, with the back as a basis, each side is ground to a standard, and the jaws are afterwards bored and tapped in special jigs.

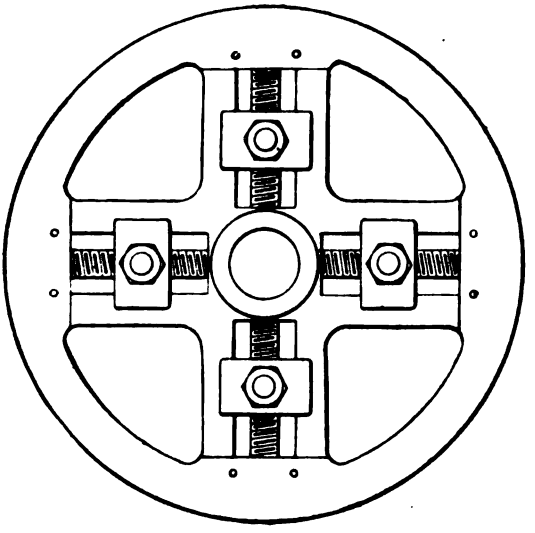

Fig. 190.

As jaws always warp more or less in hardening, especially large ones, if these were bored and tapped before case-hardening, any grinding afterwards on the back would throw the screw out of the centre of the hole in the chuck, and unless the screw was a slack fit, would lock it fast.

In the design shown by Figs. 188-190, the screws for moving the jaws have a groove turned in the collar, and a couple of pins pass through the chuck plate, and hold each screw in position. This is an old and common device, but not a good mechanical arrangement, because not only have the pins to stand the pressure

exerted by the screw on the jaw when gripping the work, but they are also subject to the friction of the screw being turned under pressure. A better plan is to bore the chuck through, large enough to allow the fast collar on the screw to pass through, and put a loose collar on the outer end of the screw, making that end proportionately larger. This collar is usually held by means of two pins, bored so that the body of the pin fits half into the collar, and half into the solid of the chuck plate. Mr Hamer has a patent adjustable collar, which is chased, and the hole in the chuck tapped out, and also such of the surface of a die let into the hole as comes in contact with the collar. By means of a small screw acting on this die, the collar on each screw can be instantly released and withdrawn or adjusted, and as instantly gripped, or locked fast. In practice left-hand screws divide favour with right-hand, being more "handy" than the latter.

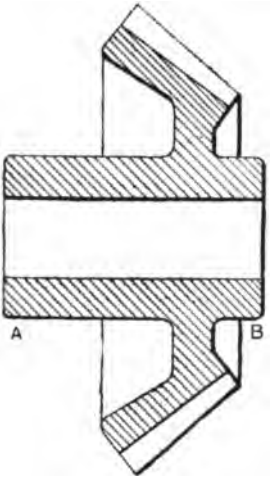

Fig. 191.

Almost any class of face jobs can be gripped in these jaws with little risk of slipping. And the more nearly the step of the jaw makes contact over the whole of its depth with the surface of the work, the better will the holding power be. Subsequent illustrations show some examples of work suitable for jaw chucks, respecting which the following remarks may be made:—

Take the bevel wheel in Fig. 191. This can only be chucked by the bosses, and nothing more suitable could be desired. The work to be done is to bore the hole, and face both bosses. Sometimes the ends of the teeth are faced for good appearance. Clamping plates could not be employed on a job like this, though face-plate dogs might; but the jaws of the dog chuck are the proper things to employ. If one, or both of the bosses are out of truth with the teeth, the latter must be set to run true, and not the bosses. The independent jaw chucks are better from this point of view than the concentric. The wheel being adjusted to run true by the teeth, the bosses are just cleaned up with a

roughing tool to run true also. The proper way to turn this wheel is to chuck first on A, and then on B.

The bevel wheel with cone clutch (Fig. 192) requires two chuckings, first at A, and next at B. As it runs at a high speed when in

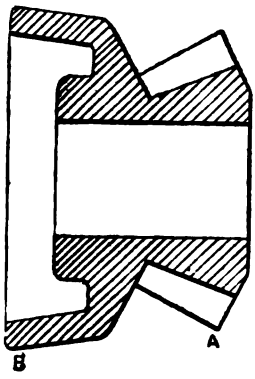

Fig. 192.

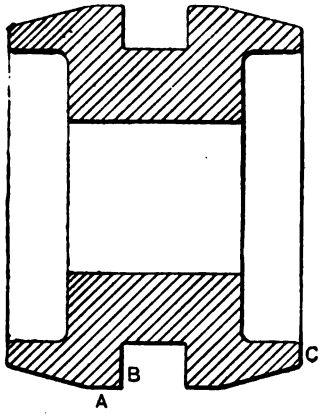

Fig. 193.

use, it is turned all over, as well as bored. The fact that there is no parallel portion to grip at A or B does not matter; for since the face of the casting beds on the plate, the grip of the jaws is ample. This, again, is a job where clamping plates could not be fixed.

Fig. 193 is a double cone clutch which is differently turned, according to its size. It cannot be held by dogs safely against the tapered portions. If the dogs do not reach to the parallel portion A, clamping plates are employed, pinching either at B, or at C. These prevent turning of the outside being done, and therefore, after the hole is bored, the clutch is better put on a mandrel, and all the turning done while held thus.

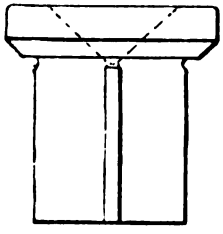

Fig. 194.

The valve in Fig. 194 is turned at two chuckings without any trouble. Two-jaw chucks are frequently used for these. Fig. 195 is a brass bonnet for a safety valve, turned all over outside, and inside for a little way, where the thread has to be cut for

screwing it to its casing. This is a job for the jaw chuck alone, gripping by the outside, two chuckings being required.

Fig. 196 is a job that might be turned either on a mandrel, in a jaw chuck, or on a face plate, with little scope for preference. The least risk of inaccuracy would occur if a mandrel were used. The jaws of the chuck, or the screws of the face-plate dogs would hold it equally well. On the whole, these methods would be preferable to the use of a mandrel when turning, from the point of view of driving, because the diameter is rather large. The

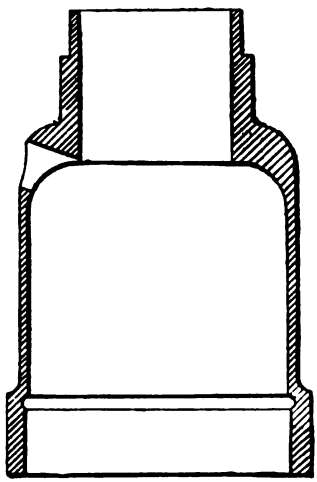

Fig. 195.

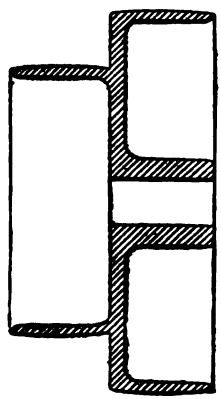

Fig. 196.

disproportion between the hole and the diameter in this case is greater than that in Fig. 193.

The methods by which jaws are coerced in the face plate, and operated would afford an interesting study. The English dog chuck is somewhat clumsily designed. It holds well, but so do others in which there is no need to bother with the washers and nuts behind. Among other designs, some, like this, have the operating screws going through a solid lug or nut, in others the screw engages with segmental threads only on the back of the jaw. The first-named type (Fig. 197) is open to the objection that the range of travel of the jaw is limited, and that the length of bearing of the screw in its lug is also limited. These are

antagonistic, for if the lug is lengthened, the traverse is lessened. Such a jaw is not suitable for reversal, the lug preventing much range of movement, and therefore separate jaws are generally preferred in such types. Unless both are alike, and fit exactly alike in their groove, wear is increased unduly.

The better type is that in which the screw engages with a segmental thread (Fig. 198) on the back of the chuck jaws. A large screw can be used, with corresponding increase of power, and there is no limit, save the length of the screw, to the traverse of the jaw, whether the latter is reversed or not. In some types,

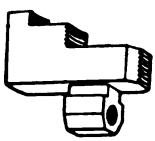

Fig. 197.

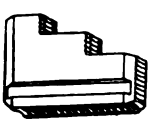

Fig. 198.

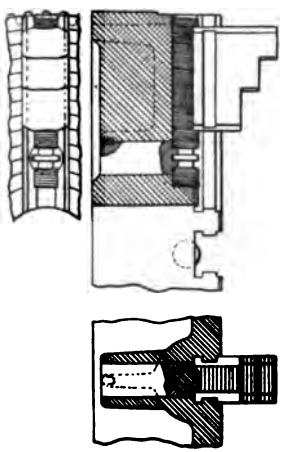

Fig. 199.

in which the square neck of the screw is abandoned, in favour of an internal square recess, the length of screw is further increased by an amount equal to the square, and collar, used to prevent end-long movement. In such cases the collar is put at an intermediate portion of the screw length, as in the Whiton (Fig. 199), which represents a heavy gear-driven face plate with jaws. The tonguing and grooving of the jaws, and the removable plugs by which the collars of the screws are retained endwise are very snug, and efficient designs.

The following observations relate specially to jaws themselves.

In Fig. 200 four main types of jaws are shown by diagrams,

A being for gripping work externally, B internally, C specially for drills, and small rods, D soft blanks to be shaped as desired.

The two main forms—those for holding by an inside grip, and those which possess an outside grip—are, for convenience, both generally stepped. Each jaw has three steps available for gripping; so that between them, pieces ranging from the diameter of the chuck body, down to those of very small dimensions, can be taken in. Jaws A which grip on their inside surfaces are often termed common jaws, because they are used most frequently. They possess no outside gripping edges, except on the largest step, and therefore have to be supplemented by another pair for holding rings, &c., by the inside. Here we have the reason for two pairs of jaws, and for the fitting of reversible jaws.

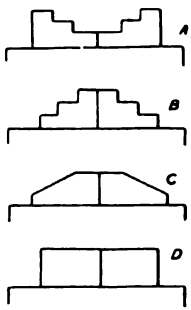

Fig. 200.

Frequently chucks are fitted with two pairs of jaws, internal and external, but where economy is studied, reversible jaws come in. Since common jaws have their curves made for inside gripping, when turned round, they are wrong. They would hold, of course, in a fashion, but only bear at their edges. The only part which is right is the innermost edge—the outermost when used as common jaws. There is more advantage in having reversible jaws for scroll chucks than in face plates, and dog chucks, because there is a little difficulty in changing jaws in scroll chucks, which must be started in carefully to get them concentric. It seems therefore that the value of reversible jaws is overrated. Yet there is a considerable demand for them. To some extent this is explained by the fact that in several of the best types of reversible jaws, as those which are made in two parts, they lend themselves to the fitting of false jaws. These are more valuable to brass finishers than to general engineers.

Reversible jaws are fitted in various ways. The commonest, and oldest method is just to run the jaw out, turn it round, and run it over the screw again. This is the plan adopted in some types of dog chucks shown in succeeding pages. The change is effected in a few minutes, but this waste of time is objectionable, and several other devices have been adopted on

the principle of fitting loose jaws, and in one or two cases of swivelling the jaw.

When loose jaws are fitted, they have to be attached with screws, and the holes for these must weaken the jaw. Using a tough quality of steel, and not making the jaws too slender, or the screws too large, the strength left would suffice for all fair usage. All the same, it is not a desirable design. Considerable strain too is thrown on the screws, which is not conducive to prolonged service. Nearly all the chuck makers have jaws of this type.

In the Skinner (Fig. 201), the upper or jaw portion is reversed by running back two screws, turning the jaw end for end, and re-inserting the screws. The direct strain on the latter is relieved by fitting a washer to each, encircling it, and entering half way into the back of the jaw, and half way into its backing piece.

Reversible jaws for scroll chucks are shown in Chapter XII., page 182.

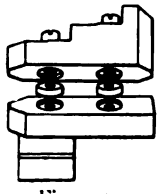

Fig. 201.

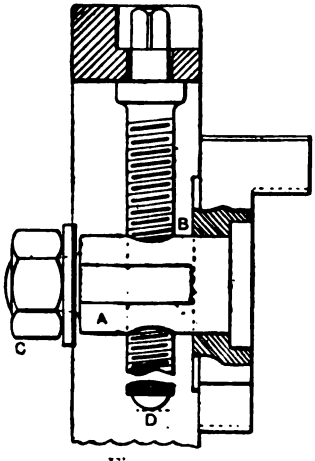

Fig. 202.

Fig. 202 shows a form of reversible face plate jaw of German origin, in which the little loss of time involved in running out and in is avoided. The screw is not supported at the end D as in the ordinary forms of chucks, and so it can be lifted slightly. The jaw nut is not solid with the jaw, as in Fig. 188, but fits it by a circular body A, and collar which permits the jaw to be swivelled on it. The jaw is prevented from turning when clamped up, by a shallow check B on the back, fitting a recess in the plate. To turn the jaw it is only necessary to slacken the nut C sufficiently to lift the check out of its recess, the play of the screw shoulder in its hole permitting of this. The jaw can then be turned round, the check dropped back, and the nut C tightened.

In other respects the design is that of the English four-jaw independent chuck.

The gripping of pieces of irregular form is done in false jaws, which are fitted to solid jaw backings in various ways. The commonest is the step jaws of the brass-finisher's two-jaw chucks. They fit by dovetails, and are easily interchangeable, and being left soft, are shaped and filed to suit cocks, valves, and similar objects that have to be bored, drilled, faced, turned, tapped, &c.

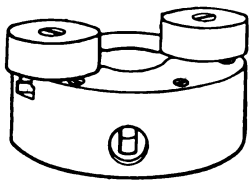

Fig. 203.

Types of false jaws of other kinds are illustrated in the two-jaw chucks of C. Taylor, on pages 178, 187, and 190.

Another type is circular in form (Fig. 203), with edges vee'd, or notched to suit different pieces of work gripped between the two

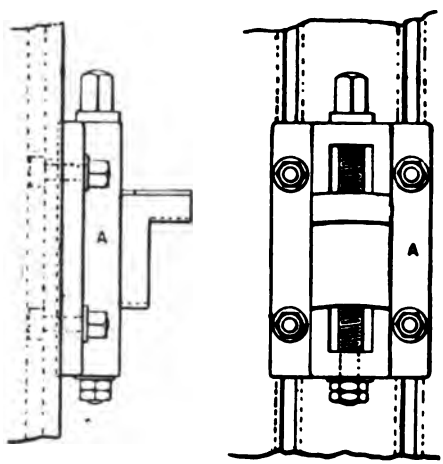

Fig. 204.

discs. The advantage of this is that the jaws need not be changed much, but simply rotated, for various jobs, on the central screws by which they are secured and tightened on the plate.

A large group of jaws is made for attachment to the common face plate. Two forms of these removable jaws for common use in lathes of large dimensions, and not infrequent in those of

medium size, are shown in Figs. 204 and 205 respectively. In Fig. 204 the jaw fits on a planed face in a casting A, flanges on which receive bolts by which it is clamped to tee grooves on the face plate. In face plates that are unprovided with such grooves, slot holes can generally be found to take the bolts, which are then made longer. Fig. 205 is an improved form suitable for any plate, fastened with a bolt at each end of the body casting. The jaws slide in tongued grooves, instead of on a face, making a more secure job, and with less tendency to tip. The screw does not go through the nut portion of the jaw, as in the previous examples, but fits only in a segmental portion of a thread cut in the back of the jaw. An advantage of this, besides the snug arrangement, is that the jaw can be reversed easily by running it along its grooves off its screw, and then turning it round, and running it in again.

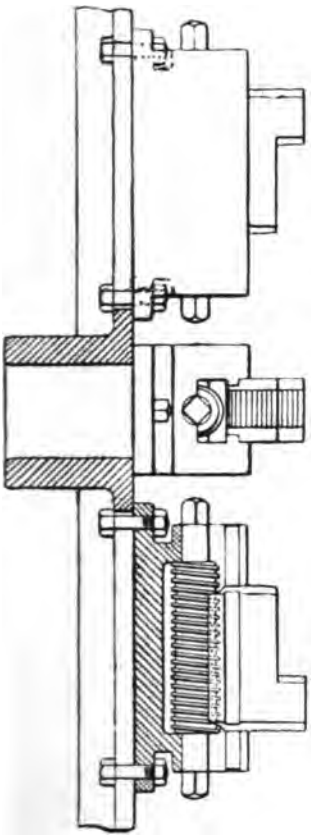

Fig. 205.

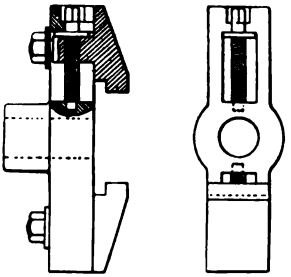

Fig. 206.

An old and favourite form of chuck is that with two jaws (Fig. 206), often termed a box chuck. The jaws slide in grooves, and are operated independently or, in some cases, simultaneously. These form a useful group, but they do not fulfil the best conditions

in the best possible manner. These chucks are durable, but the form of the jaws limits their utilities. The vee'd shape imparted to some of these is designed to embrace a considerable portion of the circumference of a bar, or other piece of work. But it is obviously impossible to render these efficiently adaptable for a large range of diameters, while they are not suitable for flat pieces, nor are they for flimsy pieces, or work that has to be held by the bore. Another objection is that the box form does not run in perfect balance, being oblong in shape. Another is that it is generally screwed directly to the nose of the lathe spindle, and cannot therefore be readily corrected when worn. These reasons are sufficient to explain the fact that the use of this chuck tends to lessen by comparison with better forms.

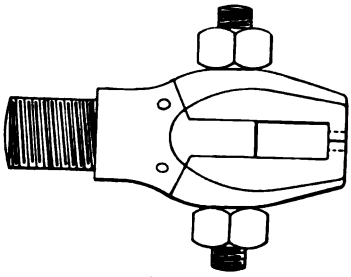

Fig. 207.

The brassfinisher's clamp, or grab chuck, or clam is used

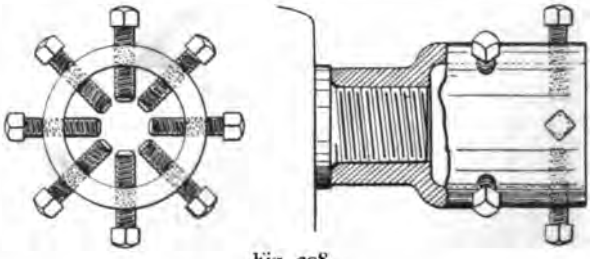

Fig. 208.

extensively. In one form (Fig. 207) the jaws are hinged. A parallel grip is better than one between wedge, or vee'd sections, which happens when the hinged jaws are opened widely.

The bell, or cup chuck (Fig. 208) still retains a limited place in lathe work, but its sphere has been invaded by superior forms of self-centring types.

CHAPTER XII.

Concentric, Universal, Toggle, and Allied Chucks.

Jaw Chucks compared with Combination Types—Objections to the Latter—The Place of the Self-Centring Chucks—The Scroll Chuck described—The Geared Scroll ditto—Criticisms of—The Taylor Spiral Chucks—Advantages of—Combination Chucks—Mechanism of—Change of Movements—Whiton—Skinner—Horton—Screws—Bodies—Forms of Jaws—and the Grooves in the Jaws—Fitting of Face Plates to Chucks—Chucks for Brassfinishers—The Work handled—Overhang—Revolving Jaw Chuck—Valve Chucks—Toggle Chucks—The Taylor Toggle Chucks—Details of—Work Chucked by Threads—Bar Work—Chucks for Drills, Pins, Studs, &c.

THE two, three, or four-jaw chuck is the sheet anchor of the lathe man. In its numerous forms it fulfils a wide range of conditions. But no single type of jaw chuck is capable of fulfilling them all in the best possible manner. The nearest approach to this ideal is found in the combination forms, but like all combination tools, they do not possess the perfection of action which is secured in specialised designs.

If the attempt is made to adapt a single class of chuck to the varying conditions of lathe practice, it must be made to grip inside, and outside work, and its jaws must be capable of both independent and of universal movements. But the embodiment of these involves reversible jaws, or else separate sets of jaws, and mechanism for throwing the independent, or the simultaneous movements of the jaws into operation at will. Experience shows that however satisfactory such a chuck may be made to operate when new, it is practically impossible to retain perfect accuracy under the stress of severe and prolonged duty, and this is one of the objections to this form.

Further, in the attempt to render a chuck adaptable to all the varying requirements of shop practice, some readiness of

manipulation must be sacrificed. But here there are chucks, and chucks; some making a very fair approximation to the ideal required, especially in careful hands. But no combination chuck will endure the long-continued rough usage which the simpler types regularly stand in our workshops. The combination form is largely a concession to the amateur. In engineers' shops the simpler types which are designed for one set of movements are mostly preferred, and with good reason. Strength as well as prolonged accuracy are ensured in this way. A complicated chuck with many parts cannot be made so strong as a simpler type. So that adaptability is sought in a number of chucks with few parts, rather than in one with many parts. In the concentric jaw chucks, the movement of one jaw effects the simultaneous movement of the others, in the same direction, and to the same extent. This, though attractive in its promise, and valuable in many classes of work, is not universally adaptable, for the following reasons :—

The operating parts wear unequally, and the absolute concentricity is thus impaired. It is not practicable to tighten all the jaws properly from one screw alone. If this is attempted, the screws will become strained, with loss of accuracy, and then unless considerable force is exercised, the jaws will not bite properly. It is therefore necessary in working such a chuck to employ the concentric mechanism for effecting a moderate grip only on the work, and then to impart the slight final pressure to each jaw separately. The same precaution has to be taken in slackening off the jaws from the work, each being loosened in succession, and then ran off in unison.

Another objection to the concentric action is that in a large class of work, such as that of rough castings, and forgings which are not approximately round, but lumpy, a self-centring chuck is practically useless. It is necessary to have a chuck for these, the jaws of which can be separately adjusted to the inequalities of the work, and this is the more necessary when allowances for turning and boring are cut very fine. In the case of work already turned, in stampings, or in some machine-moulded castings, and in smooth drawn bars, the self-centring chuck finds its proper sphere. And in bar work, the ordinary types give place to self-centring chucks of other kinds, in which the jaws, or collets are coerced by the conical sectional form of their holders.

In the small scroll chuck shown in Figs. 209 and 210 the rotation

of the back or knurled part A in relation to the face-plate B, brings the scroll *a* into operation, and moves the jaws C inwards or outwards. In chucks of small diameter—say of 3 in. or 4 in.—this movement applied by the hand to the knurled body suffices to grip most work securely, and the lever scarcely needs to be applied to the holes *b*, as it is in the larger sizes. With fair usage, these chucks retain their self-centring capacity for many years. Even though the jaw threads wear a little slack on the scroll, this does not impair the true centring, because each jaw still travels outwards or inwards the same distance in relation to the others. With chucks of this class, when supplied with two sets of jaws, almost all ordinary requirements are met. As the jaws are easily run back out of their grooves, one set can be substituted for another in about a minute. A hole through the body permits of the insertion of rods, and small tools, or of a bar in a hollow mandrel lathe, provided the chuck is fitted to a face plate E as shown.

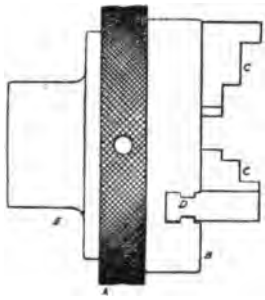

Fig. 209.

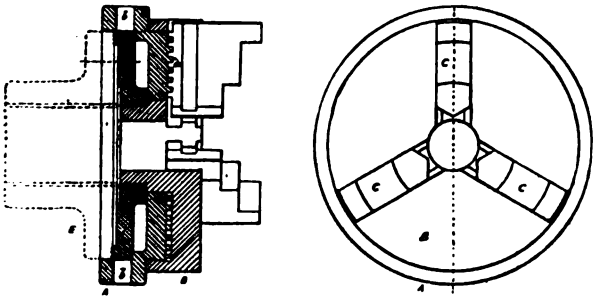

Fig. 210.

The geared universal scroll chuck is an advance on the ungeared scroll of Figs. 209 and 210 in this respect: that instead of using the hand in the smaller sizes, or a lever in the larger to turn the scroll and actuate the jaws, two or more pinions A (Fig. 211), and a circular rack B, are employed. When one pinion is rotated

by the wrench, inserted in the hole *c*, the circular rack renders the movements of the other pinions simultaneous, and uniform. A better leverage is thus obtained, using a key, and the increased friction due to the teeth also tends to produce a tighter hold on the work.

The evils incidental to, and practically inseparable from, the use of this device are, first, some slight amount of elasticity between the parts, and, second, rather serious wear. It is in the attempt to minimise these that we find considerable modifications in the geared chucks. To lessen the first, it is essential that the pinions and rack should have ample support, and for the second,

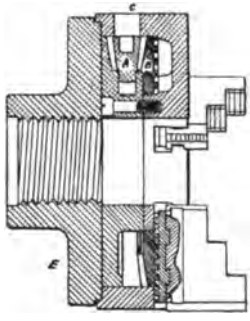

Fig. 211.

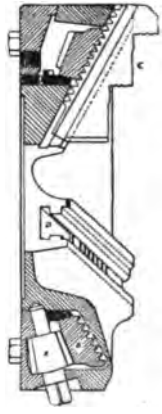

Fig. 212.

that a tough quality of open hearth steel, and preferably drop forged, be used, and the teeth cut very accurately.

The first-named conditions involve making chuck bodies in two or more pieces. In most designs, one portion, about half the thickness of the body, is recessed to receive the rack; and one half of the bearing recesses for the necks of the pinions. The other half takes the other portion of the bearings for the necks, and the screws for operating the jaws. The two portions are jointed through the axis of the pinions. The jaw screws are enclosed, and protected within ribs, and these and other ribs help to stiffen the main or front portions of the chuck body. The gears are completely boxed in, and the bearings of their necks

come close up to the shoulders of the pinions, in order to eliminate as far as possible springiness of the gears. In this way nearly all that can be done, is done to make a snug, well-supported mechanism. This is substantially the design of the Horton, the pioneer of this class of chucks, of the Cushman, the Westcott, and the Skinner chucks.

Spring to a slight extent does, however, occur when tightening up one pinion very hard, due to the elasticity of the circular rack, notwithstanding that the latter makes a close working fit in its recess. It is for this reason that full pressure of the spanner for

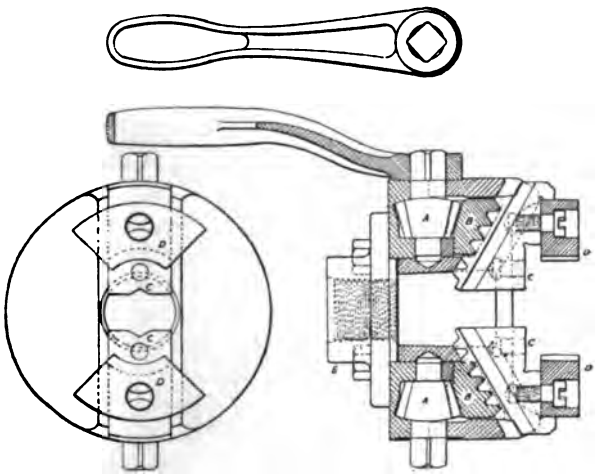

Fig. 213.

tightening should not be put on one pinion only in lightly built chucks, but on each in succession, after the jaws have been brought into contact with the work. For this reason also some of the later chucks have their circular racks made of considerably stiffer cross-section than they were in the earlier designs, all of which were characterised by flimsiness.

The scroll, or "spiral" chucks, as made by Mr Charles Taylor, of Birmingham, are excellently designed for heavy duty, being of strong construction, and qualified to withstand prolonged wear. In this design (Figs. 212 and 213) the scroll is cut on a conical surface; hence the designation "spiral" applied to it. This

spiral is apparently a little matter, yet it yields several practical advantages over the flat or scroll form. The chuck is also a geared one, having pinions A working in a circular rack B, the teeth of which are cut directly on the back of the spiral piece.

It is rather surprising how great a difference results from the substitution of a steep spiral for a flat scroll. In the latter, the leverage to which the jaws C are subjected when gripping work of large diameter is considerably greater than it is in the spiral form, in which the spiral follows the same slope as the jaws do. But the principal advantage is that the gripping pressure takes place normally to the inner face of the screw threads, and these, therefore, receive the strain, similarly to buttress threads, although their sectional forms are of the Whitworth shape.

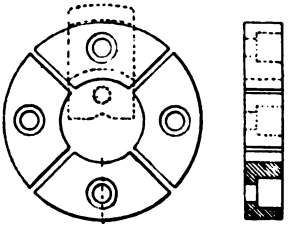

Fig. 214.

From this follows the fact that a thread of finer pitch can be used, giving strength equal to that of a coarser thread cut on a flat face. Finer pitch means greater power, and increase in wearing surface. As also the pressure comes normally to one side of the thread, half the surface of the latter is backed up by the solid metal behind.

The illustrations show a large, and a small size of chuck. One difference in the two is that the larger sizes (Fig. 212) have their pinions A at an angle; in the smaller ones (Fig. 213), the pinion axis is horizontal. The smaller drawing shows a chuck specially designed for brass-work, with false jaws D, screwed to the main jaws C, and having two jaws and two pinions only. The false jaws D are simply fitted into the shoulders of the main jaws, and there screwed. Any forms can then be given to them to suit the work in hand. The method of making such jaws is to turn and drill a ring of the size required, and part it off into segments (Fig. 214), which shows four jaws parted, and the main chuck jaw dotted beneath. After forming the jaws to the circular shape, they may of course be further cut to vee shape, or other forms to suit the work.

An intermediate face plate is required, as shown in Fig. 213, to attach the chucks to the mandrel nose. The chucks hold work equal in diameter to their own size.

The combination scroll chuck is an elaborate piece of mechanism, because it includes devices for changing from universal, or self-centring movements of the jaws to independent. In other words, provision is made for the ready throwing in and out of the circular rack, or some other equivalent device.

What the combination of two classes of movements involves is this: that as the centres of the pinions are necessarily fixed, the rack has to be moved bodily into and out of gear with the pinions, or else separate lever movements are applied to the rack pinions and to the jaw screws.

Two movements are common for throwing the circular rack into and out of gear with the pinions—one a simple dropping or lifting of the rack, the other its sliding on an inclined backing or cam ring. The Skinner chuck is of the first kind. Here a stud and nut effect the change. A plain end on the stud fits a hole in a cam ring lying on the back of the circular rack; a flat piece fits and slides in a recess in the back of the chuck. The stud, in being moved from one slot to another adjacent, turns the cam ring with it, until the cams or projections on the back of the ring fall into recesses in the back of the chuck, and the rack falls out of gear from its pinions. Reversing the action throws it into gear again. In each position a circular nut threaded on the outer end of the stud allows of the clamping of the ring in either position. Before throwing the rack into gear with the pinions, after the chuck has been used independently, the jaws must be set true with the outside edge of the shell.

In a combination chuck by the Pratt & Whitney Company, either set of mechanism is thrown into operation by pressing a thumb catch, on the back of the chuck, and revolving the ring which supports the rack. The chuck can be used for eccentric work by placing the jaws in the positions required, and then engaging the screw pinions with the rack to operate the jaws simultaneously. The jaws are also reversible. The removal of three screws permits the chuck to be taken apart for cleaning and oiling.

In the Whiton combination chucks (Fig. 215), the circular rack is not dropped out of engagement when arranging for independent adjustments of the jaws. The jaws are instead operated through intermediate pieces *a*, fitting on the scroll at the back. All that is necessary when working independently is to apply the wrench to the screws *b* that move the jaws; and when self-

centring, to apply it to one of the scroll pinions through the hole *c*, which forms a bearing for the shank of the wrench, and supports the pinion at that end.

The bodies of the Whiton chucks are made as a single solid casting, in preference to being built up. In the larger sizes of the lever scroll chucks a band of wrought iron is shrunk around the front portion (Fig. 216, A). The holes B, in the scroll body for receiving the lever, are drilled into deep bosses, the outer rim left between the bosses being lighter than continuous solid metal would be.

In the Horton combination chuck, four shoes are moved, by thumb nuts up or down inclined planes, so causing them to afford

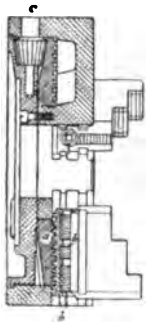

Fig. 215.

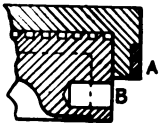

Fig. 216.

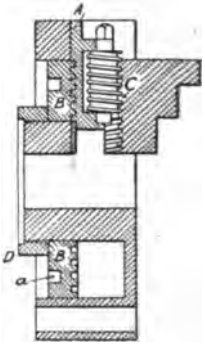

Fig. 217.

support to a loose ring upon which the annular rack is supported, or to fall away into pockets, allowing the ring to drop.

In the Westcott scroll combination chuck (Fig. 217), steel shoes A are actuated in combination by the scroll B, carrying with them the operating screws C, of the jaws, and the jaws themselves also. For independent movement, each jaw can be actuated by its own screw C. In this case there is no need to drop out of engagement, as in the geared chucks. D is a ring which retains the scroll in its recess. A special cranked spanner is inserted in the holes *a*, in the back for effecting the self-centring movements.

One of the Whiton geared chucks has connection and disconnection made in the following manner (Fig. 218):—A circular rack *a*, is shown in gear with one of its pinions. The insertion

of a square key in the hole *b*, imparts a single turn in either direction to the pinion *c*, gearing with teeth on the edge of the cam ring *d*. The latter is thus raised up on the fixed cam ring below, or dropped, in which case the projections interlock, and the rack *a* falls out of engagement, so leaving the chuck independent.

It is a pity that the square necks of the pinions and screws stick out beyond the body in many chucks. Firms who have been making chucks for a generation past should have abolished these dangerous excrescences ere now. The danger lies in the shanks catching in the worker's clothes or fingers, with disastrous results. Only some later patterns, like the Whiton, have a square recess in the circular bearing necks of the pinions, so that nothing projects beyond the edge of the body. These recesses are variously made in the shank of the pinion, or in the pinion body,

Fig. 218.

or in the ends of the screws which operate the jaws, these latter screws having holes generally at each end, so that the screws may be reversed when the square is worn badly, and the fresh end used.

There are two types of bodies used in scroll, and in combination chucks: the older, made in two parts, united with six screws, one each inserted to right and left of each bearing neck, and the later, still in two, but having the outside portion in one with the face, and the back portion recessed into this, and screwed, as in Fig. 211 and 215. The latter accords best with one's ideas of solidity. In the former, a great deal depends on the screws, since the two portions of the body are not checked or registered together with a shoulder.

In considering the scroll chucks we have not said anything specially about the forms of jaws used, respecting which many problems arise. One point should be noticed, the wear on the grooves at the back of the jaws.

The difficulty is, that a spiral with ever-changing radius has to

engage with jaws having tongues and grooves of constant radius. If these fit in one place they cannot fit anywhere else. Hence a mean has to be struck by giving a curve of rather quick radius to the outside edges of the tongues. Looking at a jaw that has had some service, it is seen that a bearing only is taken along from one-half to two-thirds of the curve, and not at its ends. This does not appear as though favourable to durability. But here, as in other matters, the unlikely happens, when excellence of material, workmanship, fitting, and care in use are combined. Good case hardening conduces to long life, so does the exclusion of grit from the scroll and jaws, by their complete enclosure. Another point is taking apart at intervals, wiping, and oiling. Another, never to overstrain when tightening up—a wrench of greater length than that supplied with the chuck should not be employed.

The tongue-grooved fitting of jaws to the chuck body, seen

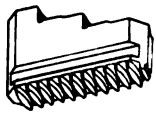

Fig. 219.

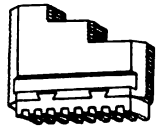

Fig. 220.

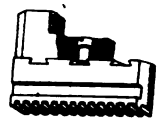

Fig. 221.

best in Fig. 209 and in Fig 212, D, helps the scroll teeth materially by relieving these of much strain due to leverage. As these parts are hardened, and have large surfaces, they do not wear much throughout the life of the chuck.

In a well-made chuck, nothing can move away from the place in which it is coerced, and leverages and elasticity are thus reduced to a minimum. Pinions and their bearing necks and circular racks are snugly enclosed, and jaws are rigidly coerced.

Fig. 219 illustrates the Sweetland jaw, as used for scroll chucks, the thread sections being convex on both edges to render them reversible in the scroll.

In the Whiton design the jaw portion is united to the jaw body with a couple of dovetails (Fig. 220), on which the jaw can be reversed. In the small jaws, this alone suffices without screws, in the larger sizes, 12 ins. and over, a screw is also employed (Fig. 221). In the small sizes, the jaws have to be run out before the jaws can be reversed, because the omission of the screws requires

that the dovetails should be below the face of the plate, to be kept in place sideways. Where screws are used, the dovetails are kept high up, well clear of the face of the chuck, and they have not therefore to be removed, but the screw is simply run out, and re-inserted when the jaw has been reversed. In the Sweetland jaw, one broad dovetail is employed, and two screws secure the jaws to their backing.

Chucks are attached to their mandrels by means of an intermediary face plate (Figs. 209, 211, 213). A shallow recess is turned truly on the back by the manufacturers of the chucks, to which this face plate has then to be matched by the customer. The face plate is a plain one, screwed to fit the lathe mandrel nose, and provided with holes matching those in the chuck body, for attaching the plate by means of screws. The method of fitting the plate is as follows:—

The face plate is first gripped by its disc in the chuck of a screw-cutting lathe, bored, and threaded to fit the mandrel of the lathe in which it is to be used. It is then mounted on the latter, and the disc portion turned up as truly as possible. Any slight inaccuracy in this stage of the work will be apparent in the subsequent mounting of the chuck. The disc of the plate must bear across the bottom of the chuck recess, and not upon the raised shoulder or ledge (see Fig. 211), which affords but a scanty surface. The outer diameter of the disc must fit the chuck recess perfectly, without shake, as upon this depends the concentric running of the jaws. The chuck recess must not be bored or turned out larger, as tampering of this kind will result in the introduction of slight inaccuracies in the future running; in fact the chuck makers say that they are not responsible for the truth of chucks which have been meddled with in this fashion. When the two are matched, the holes are marked on the plate for the screw holes, and tapped. The screws should pass in without excessive force being used, which is likely to distort the chuck. Before finally fastening the two together, care must be taken that no trace of dirt or grit is present on the contact faces, because this is fatal to accurate running.

An alternative method of fitting which is followed in the case of old chucks, which have become a little worn, is as follows:—A casting, or stud is first gripped in the lathe jaws and turned up truly. The chuck to be mounted is then held on this by closing

in its jaws upon the stud. A face plate, previously turned upon its face, and edge is then screwed to the chuck, leaving its boss, and hole to be done. This operation is carried on while the chuck is driven by the stud. It is apparent that the ultimate truth of the mounting will depend on the truth of the jaws, and if these are worn somewhat, the result will nevertheless be as true as it is possible to get the same. This method of course need not be followed in the case of perfectly new chucks, in which there is no doubt as to the concentricity of jaws, and chuck back.

The smaller sizes of chucks, chiefly those for drills, are not mounted on face plates, but on shanks, tapered to fit into a suitable hole in the chuck. A taper also holds the shank in the mandrel nose, while a nut serves to force out either taper when desired. The objection to this mode of attachment is that rods or drills cannot be passed right through the mandrel, as is the case when a face plate mount is employed, but this is of no moment in simple drilling, and must be put up with anyhow.

Brassfinishers' turning stands apart as a class of work distinct in the main from that of iron turners. One particular aspect of it arises here, in which questions of chucking arise.

In the first place, some very awkward shapes have to be handled repeatedly, such as the parts of cocks, valves of many kinds, unions, and such like. If these were gripped by the ordinary methods of three-jaw chucks, face plates, and angle plates, &c., the time occupied would be ruinous. What is required in nearly all work of this kind is a swift method of gripping—jaws covering a wide range of sizes, and in numerous shapes—flat, concave, vee'd, and angular, or of irregular forms to correspond with the almost infinite variety of pieces to be held. Consequently most brassfinishers' lathes are equipped preferably with two-jaw chucks, of simple or of more complex forms, and having loose removable jaws fitted in a great number of instances. The common two-jaw chucks, with right and left-hand screws, are used extensively by brassfinishers, because of the facilities which they afford for gripping work of irregular and awkward shapes by their formed jaws, of inserted and detachable shapes; and by a single movement the right and left-hand screws cause both jaws to grip simultaneously. For the great majority of brassfinishers' pieces the property of self-centring is invaluable, though exceptions, of course, occur.

An objection to the ordinary methods of chucking when applied to brass fittings in quantity is the overhang which results from fixing work on the face of a plate, instead of in the body of a chuck. In some cases this is so great as to require the aid of the back centre in affording support to the end. In others, where the overhang is not sufficient to require this, much may be done to lessen it by a suitable design of chuck. A great point, therefore, in the designs of brassfinishers' chucks is the diminution of overhang, and the fitting of parts and adjuncts so that the vital portions shall lie as snugly as possible internally. To counteract the effects of the overhang, which is often unavoidably due largely to the shape of the work itself, the mandrel necks of lathes are made larger and longer than formerly. Not the least of the advantages of the hollow spindle is that it compels the adoption of larger necks.

Derived from the two-jaw chuck is the revolving-jaw chuck, which is an example of a very specialised type, used almost exclusively by brassfinishers. In this a valve can be faced, bored, and threaded on one branch; rotated, reset, and faced and bored, and threaded on another branch or branches, at exact right or other angles with the first. The removal and insertion of a pin effects the setting in some designs, or the employment of enclosed gearing in others, and there is no risk of inaccuracy, nor waste of time involved in setting, for a dividing plate or an index plate gives the exact setting, and locks the jaws rigidly. Jaw blanks are fitted to any extent, to be cut to suit the shapes of the bodies of any valves.

In most cases the two jaws at opposite sides of the valve are alike. But for chucking for turning ends, one jaw only need be made hexagonal, the other being concave, the latter taking a bearing against the spherical body. So well designed are these chucks at the present time that ball races are embodied in several, to permit the work to be turned round for resetting without risk of its slipping in the jaws, which is liable to happen in the old style where the grip has to be loosened slightly before the jaws can be turned round, owing to the excessive friction against the faces. The ball races relieve this.

In one design of chucks used by brassfinishers an angle plate is cast with the face plate, and to this false jaws are fitted, against which the valve body is clamped. This makes a com-

pact and stiff job, and avoids the overhang of the angle plate beyond the edge of the face plate, which often happens when a loose angle plate is fitted, and keeps the work clear away from the face plate, so simplifying the clamping.

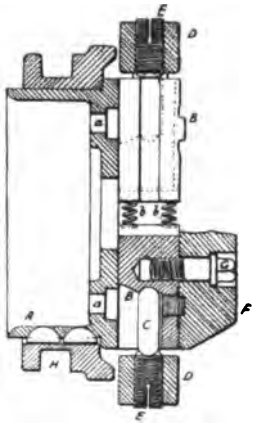

Fig. 222.

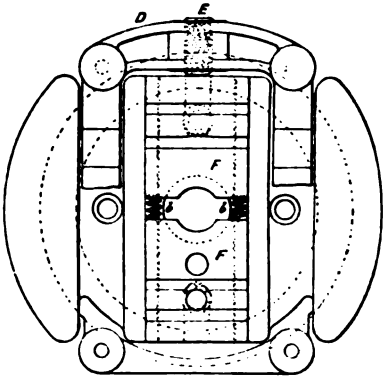

Fig. 223.

The toggle principle is embodied in a recent chuck, shown in Figs. 222-227, by Mr Charles Taylor, of Birmingham. With it, when required, certain movements are embodied by which the lathe belt is shifted rapidly, and the chuck pulled up by a brake. The chuck shown measures $8\frac{1}{2}$ in. in diameter, and can be attached to any lathe between $6\frac{1}{2}$-in. and 9-in. centres.

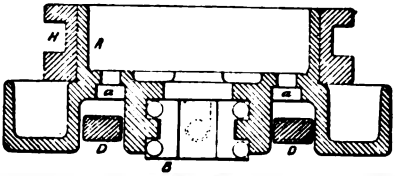

Fig. 224.

Figs. 222-226 illustrate the essential fittings of the chuck body with the toggle arrangements, but without the belt-shifting device, and Fig. 227 shows the details of the lever, and the fastening to the lathe bed. Fig. 222 is a section taken vertically through the chuck, one jaw being omitted; Fig. 223 a face view; Fig. 224 a section taken horizontally, the jaw being omitted; Fig. 225 shows the sliding ring, and Fig. 226 the

attachment of a bridge or frame piece which contains the screw that receives the reaction thrust of the toggle pin, and by which its thrust is adjusted.

In these Figs. A is the chuck body, bolted through the holes *a*, *a*, to the face plate, or back plate (not shown), which is screwed to the mandrel nose; being identical in this respect with the fitting of high-class chucks generally to plain face plates. Provision is made in the piece A for the sliding of the jaw bases B, B, by means of the grooves seen in the sectional plan (Fig. 224), and provision also for effecting the thrust of the toggles C, C, through the framing D, which is screwed to the ring H, shown in the detail (Fig. 226). The thrust of the ball ends of the toggles is seen clearly in Fig. 222, taking place between the sliders or bases of the jaws B and the screws E in D. The jaws themselves F, are false, or removable, tongued to B, and fastened by the bolt G, an arrangement which permits of making soft jaws of any shape to

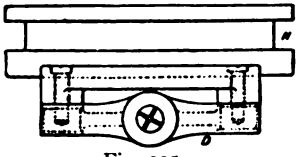

Fig. 225.

Fig. 226.

suit any kind of job. The jaws, thrust inwards through the straightening of the toggle pins C, are pushed back by the pressure of the springs *b*, *b*. The screws E, E, permit of regulating the grip of the toggles on jobs of different sizes, so that delicate work shall not be injured.

The toggles are moved by the sliding of the loose ring H by a lever, or slider, fitting in the groove of H—compare with Fig. 227. Woodruff keys (Fig. 222) ensure the rotation of the ring. The lever is hinged in a boss belonging to a casting that is bolted to the lathe bed in front of any existing headstock (Fig. 227).

Such a chuck as this is capable of taking a good deal of work that cannot be put in the ordinary chucks of capstan lathes, the standard ones of which are adaptable for bar work, and plain disc work chiefly. It resembles these chucks in the fact that the rotation of the lathe need not be stopped to effect the insertion and removal of work. Its value lies, therefore, in articles on

which the amount of work to be done is so slight that the time saved through letting the lathe run constantly is worth consideration. It is thus eminently valuable for repeat work of a certain class, while it is adapted also to ordinary lathe jobs. Its value, too, would increase in proportion to the stock of jaws accumulated.

In cases where it might be desirable to stop the lathe for each article—as, say, for the purpose of checking the truth of the work

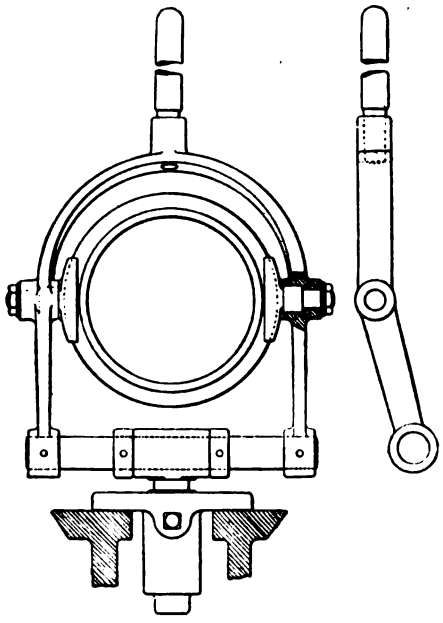

Fig. 227.

being turned—there is a device fitted by means of which a belt-shifting fork is connected to the lever that actuates the chuck, and which also exercises a braking action to pull it to rest. The reverse movement that closes the chuck does not start the lathe, which is done by a separate handle.

In another valuable chuck by Mr Taylor, for brassfinishers, the principle of the inclined plane is embodied. It would be commonly denoted as a cam motion. This is illustrated in Figs.

228-237. The jaws have a very limited degree of gripping movement, their inclination being but two degrees, but by the substitution of false jaws, anything from $\frac{1}{8}$ in. to 5 in. in diameter can be taken.

The various views render the construction clear. The lever

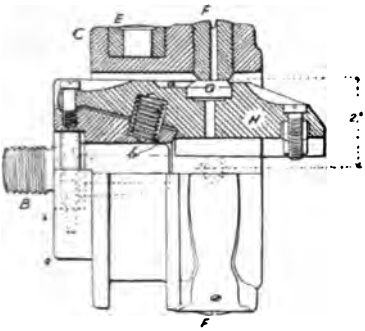

Fig. 228.

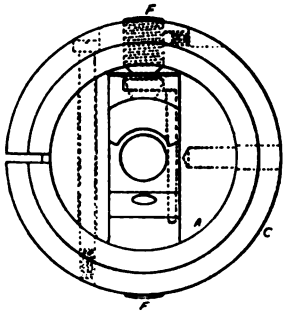

Fig. 229.

in Figs. 232 and 233, slid along the slot in the supporting bracket, closes the jaws, which open on the reverse movement of the lever under the action of springs, Fig. 228 being a part sectional, part outside view, taken vertically. Fig. 229 is a face view; Fig. 230 shows the body, and one jaw; Fig. 231 the sliding ring; Figs.

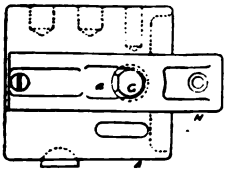

Fig. 230.

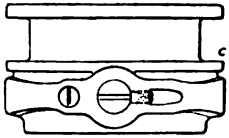

Fig. 231.

232 and 233 the operating lever; and Figs. 234-237 a jaw and jaw fittings.

In this design, the chuck body A is attached to any lathe spindle with an internal, or as shown, an external thread B (Fig. 228), not exceeeding $1\frac{1}{2}$ in. in diameter. A sleeve C encircles, and is slid on this under the action of the lever D (Figs. 232 and 233), fitted with sliders E, E, in the groove of C (Figs. 228 and 231). The

ends of the screws F press on studs G (Figs. 228, 230, and 234), sunk into recesses in the hinged jaws (H, H) during the forward movement of the sleeve. On its backward movement the ends of F, F fall into the recesses *a*, *a*, in the jaws, and the springs *b* then press the jaws outward and release the work. The sloping edges of F and G impart a rapid movement for opening and closing; but the very slight inclination of their faces (2°) gives a slow and powerful grip to the jaws. The ball fitting at the rear end of the latter affords the slight hinged movement necessary.

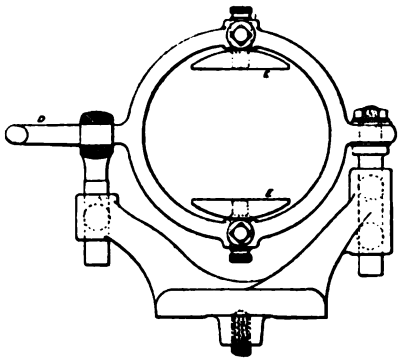

Fig. 232.

To obtain the range in dimensions required, two sets of jaws are used, each with loose jaw faces of different shapes. The jaw seen in the chuck (Fig. 228) is one form for taking loose jaw faces of the shapes in Figs. 235 and 236. The jaw in Fig. 234 is the other shape for taking the false jaw in Fig. 237. The first, it will be noticed, are fitted with little studs, and semicircular backs to the jaws, and they are fastened with one screw in each. These are made of soft metal. Or hard steel jaws (Fig. 236) are fitted without the studs. The first are cast solidly, turned, tapped, and sawn in two, forming the halves of the jaws. The jaw fittings (Fig. 237), for large work, are screwed against the faces of the jaws in Fig. 234, fitting also with a semicircular dovetail.

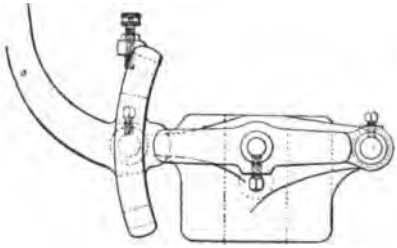

Fig. 233.

The chuck can be removed from the lathe without shifting the lever fitting, the latter being bolted to the bed by its own standard (Figs. 232 and 233). The means provided for taking up wear in the ring will be noted in Fig. 229.

An advantage of such a chuck, apart from the rapidity with which work can be gripped and released, is its roominess behind the jaws (see Fig. 228). It enables many small castings to be held by a neck facing outwards, leaving the body portion in the rear out of the way. Such work put in common jaw chucks would be most troublesome to hold.

There is a large class of brassfinishers' work which is held for turning and facing by means of the threads that are cut on internal

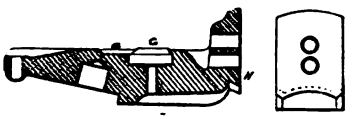

Fig. 234.

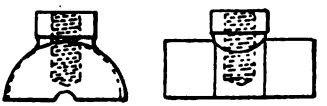

Fig. 235.

or external portions. A large number of pieces are threaded first, and then run over a screw held in a chuck, or more solidly with a special chuck, and so turned in rapid succession. Such work includes almost any pieces that are short or of very moderate length only, as screwed stuffing boxes and glands, nuts of all kinds, short milled-head screws, and so forth. In the turret lathe there are special fittings for securing work of this kind in the spindle-end.

Large numbers of pieces are turned from bar, cut off, and

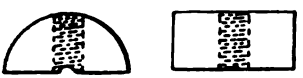

Fig. 236.

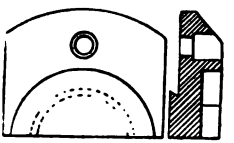

Fig. 237.

chucked—each piece separately—or turned and cut off from a long bar, passed through a hollow spindle, with the wire feed of the capstan lathe. The chucks in the latter case are usually of the draw-back or collet type, and their essential operating mechanism is embodied in the lathe, and forms an integral portion of it, the collets or bushings being changed to suit pieces of different diameters. These lie outside the ordinary groups of chucks for castings, which we have been considering. The turret lathe scores heavily in brassfinishers' shops, because the groups of tools

held in the turret permit of the performance of several operations in regular rotation, on similar pieces chucked successively. And the tendency now is to transfer much of the work of tooling castings of fair size from the common lathes to the turret lathes, which again is having a modifying influence on the forms of chucks, and will continue to do so for an indefinite period to come.

Fig. 238.

Drill chucks form a large class. A simple type is shown in Fig. 238. Here three springy jaws formed by the splitting of a cylinder are tightened or slackened by the turning of the nut A, hexagonal in shape outside. The capacity of such a chuck is

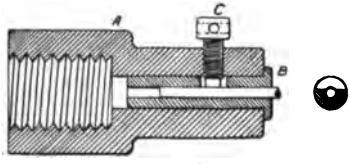

Fig. 239.

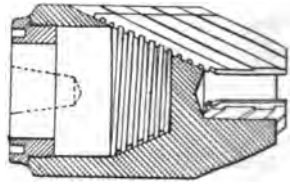

Fig. 240.

limited, ranging only within an eighth of an inch, but is nevertheless a useful and cheap form.

A form of chuck for drills and wire which is simple, and

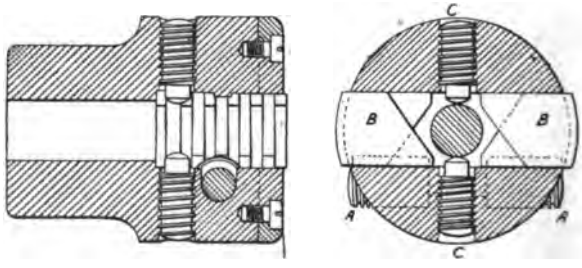

Fig. 241.

cheap is that in Fig. 239. It comprises the body A, which screws on the mandrel nose, and into which shouldered bushes B are inserted, having holes drilled in them to suit the size of rod to be held. The drill is clamped by the set screw which passes through

a cut-away portion of the bush—see the end section—and so presses upon the drill. Each differently bored bush fits interchangeably in the body A, so that any one may be inserted, and the whole clamped firmly by the screw C.

Fig. 240 shows the Whiton drill chuck. The movement of the outer knurled portion adjusts the jaws by the taper thread, the jaws being coerced in tapered grooves.

Fig. 241 shows a good chuck—the Westcott, with side setting screws, the purpose of which is to furnish an extra grip on the work after it has been centred. The self-centring device is provided by the screw A, which is a single screw passing through the body, and threaded right, and left-handed at opposite ends. The jaws B, B, are moved by segmental threads cut in one side to suit the threads on A, A, similarly, on the same principle as some of those of concentric jaw chucks. When the work is

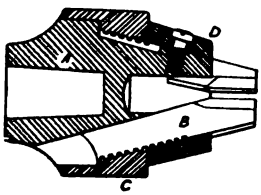

Fig. 242.

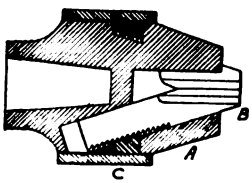

Fig. 243.

gripped centrally, the side screws C, C, are brought up to tighten it at right angles with the jaws.

Fig. 242 illustrates the later model of the Skinner drill chuck. It comprises the body A, the three jaws B, the knurled nut C, turned by hand, or with a spanner, and the cap D, attached to the body with three screws. The threaded nut actuates the jaws concentrically inwards, or outwards. It can be taken apart by removing the screws in the cap, and turning the nut, and so running the jaws out. In putting the chuck together, it is necessary to see that the number of each jaw corresponds with that of its slot in the chuck body.

Another drill chuck, the Union "Czar" (Fig. 243), comprises body A, jaws B, and knurled nut C. But it differs from other forms in having buttress threads, and in being dust-proof, the ring within the nut being encased, and covered by the cap.

The class of chucks termed step chucks, of which Fig. 244 is an example, are used for facing shallow pieces of washer-like form. They comprise the chuck proper A, and the closer B. The chuck is drawn back against the bevel of the closer by a hand wheel at the rear end of the spindle, and attached at the front to the screwed tail *a* of A. The taper *b* is ground to fit a hole in the spindle, so that the closers for different size step chucks will all interchange.

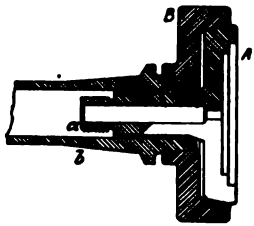

Fig. 244.

Fig. 245 shows a form of nut facing chuck which is handy when large numbers of nuts have to be faced. It embodies the provision of a concave washer, which accommodates itself to the nut which is held, and so allows the latter to fit accurately on the threads, irrespective of the squareness or otherwise of its faces with the thread. The chuck comprises a body, screwed upon the lathe mandrel, carrying a mandrel upon which the nuts are run loosely. This mandrel is held in with a cottar, which serves to draw up the nuts tightly against the concaved washer shown. When this cottar is driven backwards, the spring seen pushes back the mandrel, and so instantly releases the nut, without the trouble of unscrewing it with a spanner. For different sized nuts, other mandrels are inserted in the body.

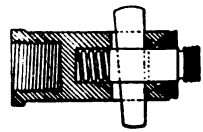
Fig. 245.

SECTION IV.

INTERNAL WORK.

CHAPTER XIII.

Drilling, Boring, and Allied Operations.

Differences between Internal and External Cutting—Drilling and Boring—Drilling in the Lathe—Drills held in a Chuck—Feeding Work by Loose Poppet—Drilling Plates—Feeding Drill by Loose Poppet—The Flat Bit—The D-Bit—Diversity in Forms—Its Value—Method of Use—Boring Crane Posts—Boring in the Lathe—Roughing-out—Boring Holes of Moderate Depth—Boring Tools on Slide Rest—Examples of—American Tool Post—The Reamer—Boring with Bars between Centres—Small Bars slotted for Cutters—Variations in Forms of Cutters—Roughing and Finishing—The Question of Fixed Diameters—Wedging—Centring—Various Designs—Difficulties of Boring—Effects of Spring—Overhang—Tool Angles—Chatter—Limit to the Size of Slotted Bars—Boring Heads—Number of Cutters—Methods of Steadying Bars and Heads—Wedging Cutters—Set Screws—Making—Alternative Methods of Fixing—Disadvantage of the Fixed Boring Heads—Boring Bars with Traversing Heads—Design of—Methods of Driving—Epicyclic, and Differential Gears—Feeds—Cylinder Boring Machine—Facing Arms—In Slotted Bars—For Boring Bars—Slide Rest Improvised—Turning Outsides of Flanges—Taper Boring—Short Tapers from Slide Rest—With Bars between Centres—The Essentials for Taper Boring Explained—Designs of Bar Used—Boring Concave Seatings—Boring Rigs—Cone Plate—Hinged Holder—Set Screws—Lining-out—Centring.

BORING is not so simple a matter as turning. It is complicated by the roughness and eccentricity of cored holes, by overhang, by the fact that facing has generally to be done truly relatively to the bore, and that external parts, such as the edges of flanges, and sometimes body parts, must be turned concentrically with the bore.

The great difficulty in deep boring is that due to spring of the

tools. This affects the tools operated from the slide rest, and those also in small boring bars.

In the first case, spring produces tapered holes, instead of parallel ones; in the second, the errors are magnified or minimised by the arrangements of the cutters, but the holes are not tapered holes, but those of variable shapes.

When a tool is carried by the slide rest, even though the alignment of the rest and head is perfect, and all slack in the slides is taken up, yet the spring in the tool will produce error of a kind depending on its shape, the degree of pressure exercised, the method of feeding, and the condition of the edge of the tool. All these evils would be minimised if turning were being done with the tool supported close up to the work.

A sharp tool will spring less than a dull one, and therefore as a tool gets dull it becomes forced outwards, penetrating less, and the hole made is not so large as that which would be produced if it were sharper. So that in boring deeply under these conditions, the further end of the hole will measure less than the front. These evils will be magnified by the presence of hard scale, which is a sufficient reason for taking a deep roughing cut, and finishing with a light one. It is also better to feed outwards on the finishing cut, as that will have the result of neutralising the effects of the roughing cut; for if the roughing tool newly sharpened starts thus, it will cut more deeply in the inner end, and less deeply as it loses its edge in approaching the front.

Though the same general rules as to tool angles apply to boring as to turning, yet the tools are more sensitive to slight variations in angle and height than those used for turning are. The reason is largely to be explained by overhang, which causes spring, chatter, and risk of digging-in, but it is also partly due in small holes to the difference between the tools meeting a concave and convex surface.

With regard to overhang, less top rake can be tolerated in boring than in turning. Provided a tool is well supported close up to the rest, a large amount of top rake can be retained on tools turning cast iron and even gun-metal. But in boring with overhanging bars, the top rake must be moderate in amount only, and for brass it should be rather negative in amount.

The shapes of the tool points are varied in keenness of point, in a well rounded nose, and in flattening. A well-rounded nose is the

best on the whole for general service, being suitable for roughing and finishing thoroughfare holes, or holes concave at the bottom.

Many flat cutters have no top rake, so that they only act as scrapes. But from 10° to 15° of top rake is a suitable amount to give, if the point is well supported, and this will serve for cast iron and tough brass, for steel of usual grades, and for wrought iron. About 5° of front rake at least must be given also.

Chatter is inevitable in flimsy boring bars, hence big bores must be done with very stiff bars, preferably of cast iron of several inches in diameter. The evil is greater in bars with fixed cutters, or fixed heads, in which case the work must traverse, than it is in bars with traversing heads. The reason is that in the first case the bar must be twice as long as the bore, while in the second it need be only a trifle longer.

In boring small holes and those of medium dimensions, the single tool, tool point, or slotted tool bar is the proper thing to use. But these are either wasteful of time or impracticable when large and deep holes or long bores are attempted. The proper way, then, is to multiply the cutters, which introduces the boring head in place of the single tool, or of the slotted bar with cutters. Here we are on the threshold of a large number of devices which play a most important part in the turnery.

Boring cannot be performed so expeditiously as drilling and turning. The cause lies chiefly in the vibration of the boring bars. The forms of the cutters are not favourable to heavy cutting, and the smaller the bore the less favourable is the angle which the work makes with the top face of the tool, to heavy cutting. For these reasons boring is always done at slower speeds than turning, usually at half, or a little more than half the latter.

The number of cuts which will be taken during the boring of a job depends partly on the quantity of metal which has to be removed, partly on the degree of finish required. It is seldom that one cut is sufficient, two are generally taken, three in the best work. A single cut through—that is, supposing a single roughing cutter only is used—is only good enough for the fitting of liners, and not for sliding contact, as that of a plunger or piston. For the latter there must be a roughing cut, and then a finishing cut. Nearly the same result can be secured, though not perhaps so reliably, by using a finishing cutter following after the roughing, in

the same bar. But that is not the usual method. The best plan is to take the cuts in separate traverses of the bar.

The differences in the diameters of holes, smaller and larger, make demands of a different kind on the tools and appliances used. Great differences occur between parallel and tapered holes, between shallow and deep ones. Boring, therefore, is regarded as one of the least satisfactory sections of lathe work, and many and varied have been the tools and appliances and rigs-up devised for this work.

Drilling and boring are properly regarded as distinct classes of operations, drilling taking place through solid metal, boring being an enlarging operation. Reaming is thus a section of boring work, its value consisting in the rectification of slight errors in the longitudinal direction, due to inaccurate drilling or rough boring, in the fine finish left, and in the exact sizing of the holes in a large number of similar pieces. If boring and drilling could be done with perfect accuracy there would be no need for the reamer. In no case does it remove much material.

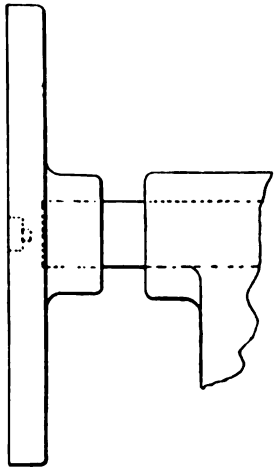

Fig. 246.

Drilling is frequently done in the lathe in preference to sending a turner's job to the drilling machine. The drills are held and operated either from the loose poppet, the work revolving, or they are held in a chuck, the work remaining stationary. Drilling done thus is either of a rough, or of a fine character.

Drills held in a chuck are the twist drills, or the straight shank drills, or the common flat drills with angular ends. In this case the work has to be fed towards the drills in one of two ways, either by the loose poppet, or by the slide rest.

When work is fed by the loose poppet, it may be held in the hands against a support which is attached to the spindle of the poppet. These are made in various shapes, ordinary and special.

A common article is a face plate bored smoothly to just

push on over the nose of the mandrel (Fig. 246), and this receives the pressure of drilling, the work being held against it by the hands, or bolted upon it. As holes to be drilled are centred, and frequently centre popped also, the drill is set in this way; and once started, one hand keeps the work from shifting, while the other feeds up the poppet hand wheel. If the strain is severe, the hand may be relieved by bolting an angle plate on

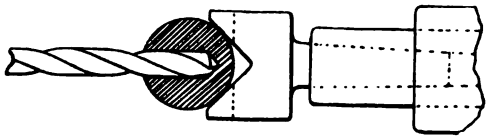

Fig. 247.

the drilling plate, and so taking the twisting effort of the drilling; or the work may be bolted on the angle plate; or special plates may be cast for repeat work, having strips or recesses to hold the work being drilled. Angular jobs may also be supported correctly by a special plate, or by an angle strip bolted to the ordinary plate. A recess must be drilled in the centre of the plate to allow the drill point to pass clear through the work.

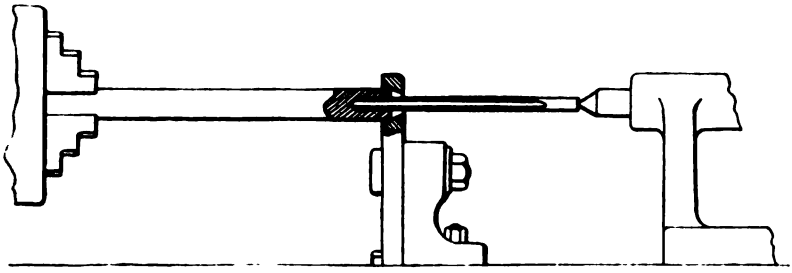

Fig. 248.

Smaller drilling plates are fitted by taper shanks to the spindle hole in place of the centre. These are suitable for flat pieces only. If holes have to be drilled in circular pieces, vee blocks must be laid on the plate—a rather awkward method—or a special block may be made (Fig. 247). Two sizes of vees can be made in one block, at right angles, and each will take a considerable range of sizes. Blocks can be cut to an angle for angular drilling.

When the drill is fed by the loose poppet, the work will be held on the face plate, with or without the aid of an angle plate, or in a chuck. Long, slender pieces must often be supported from the cone plate (Fig. 248).

Another way to hold work is to make a special fitting (Fig.

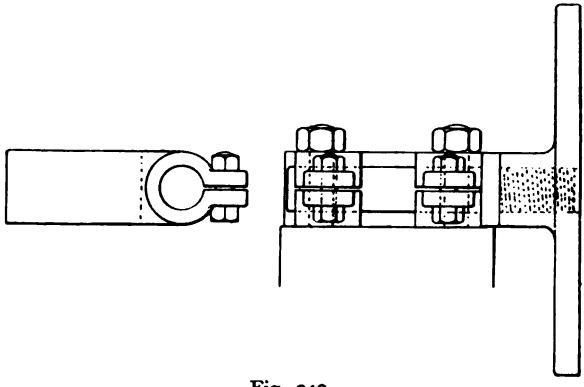

Fig. 249.

249) to go on the tool plate of the slide rest, to be clamped down by the studs of the latter. Such a device will partake of all the movements of the rest, transverse, traverse, and swivel. Two split lugs on the block receive a rod, on the inner end of which a nose is threaded to match the mandrel nose to receive the lathe chucks, principally the face plates. On the latter, work can be bolted, and by utilising the movements of the rest, holes can be drilled in circles, in parallel lines, around edges, or at angles. Such a device is more valuable in a small shop than in a large one, while for amateurs it is invaluable.

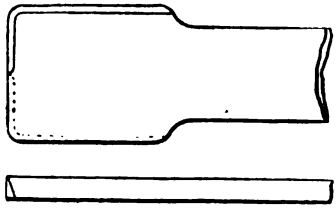

Fig. 250.

The flat drill, or flat bit (Fig. 250) is commonly used for roughing out cored holes preparatory to finish-boring, where the hard skin, and sand would ruin twist drills. These tools are easily reground, and permanence of dimensions is of less importance in their case than in that of high-class tools used for

finishing holes to size. The operations of roughing, and finishing, or "sizing" holes are kept distinct in modern practice to an extent which was not formerly done, both in common lathe and turret practice, and in drilling and boring machines.

The flat drill is often used for roughing and finishing in the practice of the ordinary shop, where the work has to be put on a mandrel for subsequent turning, but it cannot be trusted to produce holes perfectly concentric with outside parts held merely in a dog chuck. The reason is that the drill is liable to wobble and follow the rough holes, simply because it does not fill them up all round.

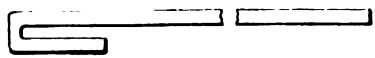

Fig. 251.

The drill being centred on, and fed forward by the spindle of the loose poppet, has to be prevented from turning under the pressure of the cut. A hook is therefore used (Fig. 251),

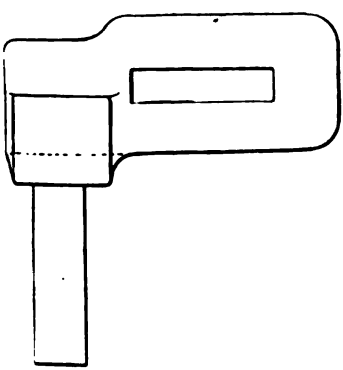

Fig. 252.

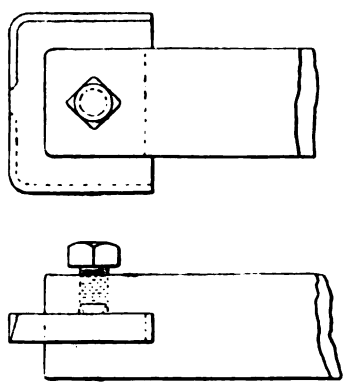

Fig. 253.

made of flat bar, bent round, being allowed to rest against the lathe bed or held in the hand. Or a slotted rest is bolted in the slide rest, or in a tee rest (Fig. 252), the tail or shank being made to suit any lathe.

In the larger sizes, the flat bits are frequently made as cutters, pinched in a slotted square bar (Fig. 253).

The only way to make a flat drill work truly is to pack it up

with wood to make it fill its hole, Figs. 254 and 255 showing alternative forms. Even then the bore should be roughed out, leaving a slight amount only to be removed with the wood-lined tool, in order to finish merely. The wood wears away rather

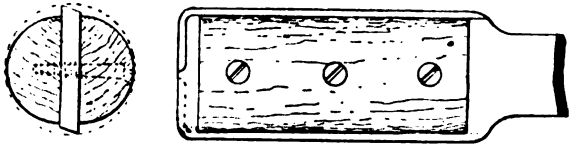

Fig. 254.

rapidly, but it can be packed out with paper to compensate for wear. These wood-packed drills are not used in the shops so much as formerly, the D-bit being preferable.

The latter occurs in various modified forms—solid, and with

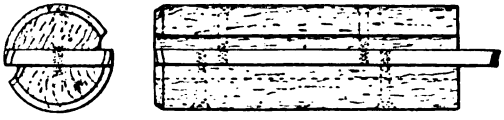

Fig. 255.

inserted cutters. Two are shown in Figs. 256, 257, and 258, the first solid, with top rake for forged metals and cast iron, the others with an inserted cutter without top rake for brass and gun-metal, but also used for forged metals. In each case the cutting edge extends right to the centre. The loose cutters

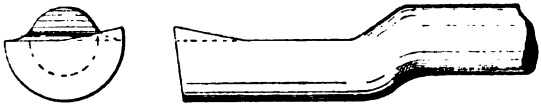

Fig. 256.

are fitted to the larger bits, partly to economise steel, which is expensive, and partly to render grinding easier. One way of fastening the cutter is as in Fig. 258, in which it fits into a recess in the solid, which helps to steady it. As the outside rubs away, the cutter can be packed out with strips of paper. At the rear

end, also, paper can be inserted when the lip becomes worn down to the body.

When the lip of the cutter has top rake imparted, as in Fig. 256, the rake is soon lost by regrinding. Generally the half-round of the body is not carried along the whole length of the tool, but a shoulder is formed, with a smaller diameter behind,

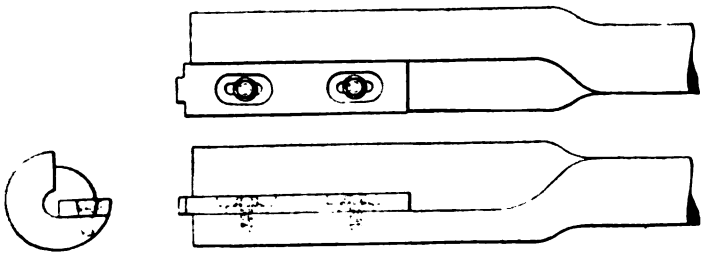

Fig. 257.

as shown, and the latter may be of any length up to 6 ft. or 8 ft. or more.

There are several ways of making these bits. The smallest ones are made from solid tool steel, shank and all, but in the larger, longer ones, tool steel is only used for the cutting portion, and welded to the shank, of common bar steel or wrought iron. It is necessary to have the outside of the bit ground truly to fit the bore of the hole, as on this its guidance depends. As bits increase in length, the torsional stress of boring becomes severe, so that it is necessary to feed very finely, but speed can be maintained by using abundant lubrication.

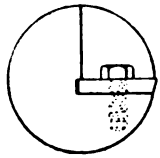

Fig. 258.

The D-bit is used both for boring through the solid like a drill, and for enlarging a roughly cored, or bored hole. It is made up to 6 in. or more in diameter, but from 2 in. to 4 in. are its more usual sizes. Though it cannot be depended on to start a hole to size, it will continue one already started. The great value of the tool lies in its longitudinal accuracy, which renders it much more useful for very long than for short holes. Only two things are essential to its successful operation: to start it fairly, and then to lubricate its nose abundantly. The con-

struction of the tool, whether solid or with inserted cutters, and the manner in which the cutters shall be fitted, are matters of detail which do not affect the main design or the high value of the bit. When started truly, only one thing will cause it to diverge from truth, namely, the open, spongy spots which occur in the interior of some forgings. Sometimes these break the lip of the bit, but not often, unless too high a speed, or too coarse a feed is put on.

It does not matter whether the cutting face of the bit is set upwards, or downwards. In the latter position the cuttings fall away. But in deep boring, lubricant must be pumped into the hole, not only for cooling, but under sufficient pressure to drive the chips out; and these will then be discharged, whether the face is uppermost or lowermost.

By turning a very long job, say ten or a dozen feet in length, end for end, holes can be bored from each end, meeting in the centre, with but minute variations there, say $\frac{1}{64}$ in. or even less. I have seen many steel crane posts (Fig. 259) bored in this way.

In boring these, one end is gripped in the jaw chuck, the other in a steady which is usually fitted with hard wood blocks, one set of which is cut out to fit the top pin A of the post, another on rechucking, to fit one of the belts B, as these posts are generally rechucked and bored from both ends in turn, the hole meeting in the middle. Provision for lubrication comprises a tube carried along the shank of the bit, through which soap and water, or oil are pumped to discharge at the nose of the bit. Being long and heavy, the weight of the bit away from the work is supported on packing. The feeding of the bit is from the spindle of the loose poppet, which is fitted with a convenient arrangement for turning the wheel (Fig. 260). The hand-wheel boss is embraced by a clip, with lugs to receive the lever A, which pivots on a bolt passing through the lugs. A boss in the lever receives a set screw, which, being pressed by the lever against one of the arms of the hand-wheel, turns the latter round and feeds the screw. As each arm is moved, the lever A is swung out sideways, lifted upwards, swung inwards again, and pressed down, giving a more regular feed, in a less tiring manner than would be produced by turning the hand wheel direct. A self-acting feed may be arranged also to feed the poppet screw in

continuously. After the hole is bored, the recesses for the brass bushes (Fig. 259) are done.

The amount of boring done in the lathe is very considerable, and its range is extensive. Though the boring machine and the vertical boring mill have appropriated a good deal that was once done in the lathe, they cannot absorb any preponderating amount in the general shop. The chief utilities of the first lie in the boring of cylinders and liners of all kinds—long, short, large, and small—and unwieldy and awkward castings of various kinds which cannot be swung round on a plate; that of the second in boring holes of moderate

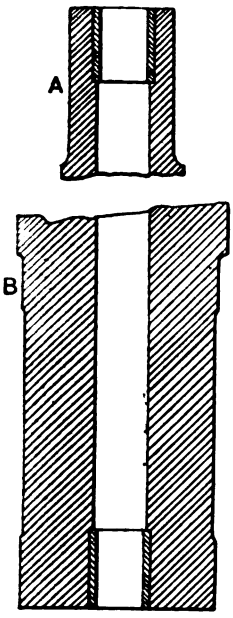

Fig. 259.

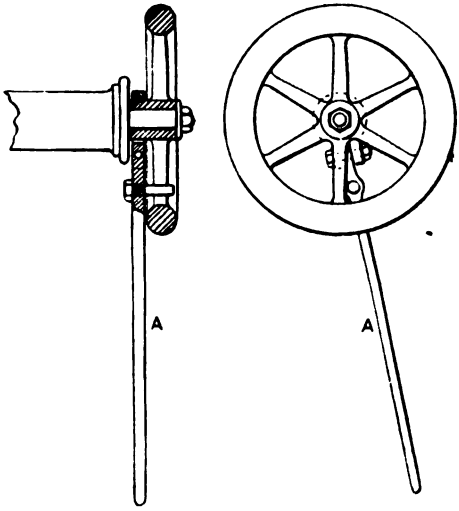

Fig. 260.

depth, both of large and small diameter, a good quantity of the latter being preparatory to lathe work done on a mandrel.

Boring in the lathe, therefore, though of less relative importance now than formerly, occupies yet a very large section of the work of the turnery. It is so handy to be able to carry a job right through on one lathe, by a single skilled workman, that this more than balances the advantages of the boring machine or the boring mill in the general run of work. When work is bored on

the mill or in the boring machine and transferred to the lathe, accuracy is ensured by mounting it on a mandrel and turning it. But there is a lot of work that cannot be treated thus, because it is not suitable for mandrels. The turner is able in numerous jobs to do the boring just as well as it can be done elsewhere. Often, however, it is a matter of absolute indifference whether a job goes on the horizontal or on the vertical lathe.

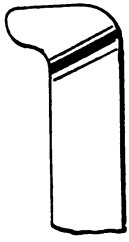

Fig. 261.

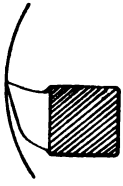

With regard to the preparation of a hole for boring, it would be always better, if time permitted, to take a rough cut through a cored hole, using tools shaped with round-nosed points for roughing, and not to attempt any finish at this traverse. The case is analogous to outside turning, in which a more pointed tool precedes the flat-nosed one. But there is really more reason why the bulk of material should be removed by purely roughing tools when boring than in turning, because in big bores more tools are usually in simultaneous action in the first than in the second; more strain is in consequence thrown on the work, with greater risk of temporary distortion occurring. I remember seeing the brass body of a pump twisted and spoiled by the stress of boring with a head of flat cutters in the attempt to run it through in one traverse instead of two, the allowance for boring being too great.

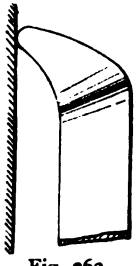

Fig. 262.

The facing of ends and flanges, when the work is a fixture, must be done with a facing head. Only in small work can it be done more economically by putting the bore on a mandrel. Speaking generally, the facing head is indispensable for this work, as it is for the turning of the edges of flanges. But when an outside portion of the body is turned, this must generally be done on a mandrel, or else it must be done before boring and the piece chucked by that for boring.

Holes may be grouped under two heads—blind and thoroughfare. The tools suitable for one are not always adapted for the other. Or holes may be classed as shallow and deep, and here again the same class of tools would not be suitable for both.

Fig. 266, or diagonally. The latter is necessary when the tool has to cut in front of the bar, when, to avoid the interference of the tool bar and of the pinching screw with the end of a blank hole being bored, the device of Fig. 269 is adopted, the tool being set at an angle, the point coming beyond the bar, and the head of the set screw on a sloping face.

A refinement of the latter, comprising

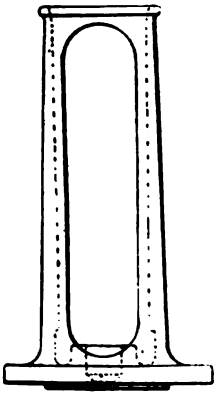

Fig. 268.

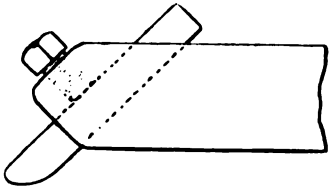

Fig. 269.

a boring tool holder in which the cutter is at an angle, is shown in Fig. 270. Here the set screw at the front is abandoned, its

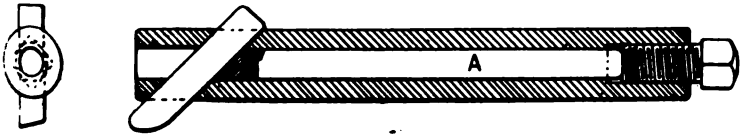

Fig. 270.

function being supplied by one at the back. Pressure is exercised by this through a loose steel rod A, fitting the hole in the bar,

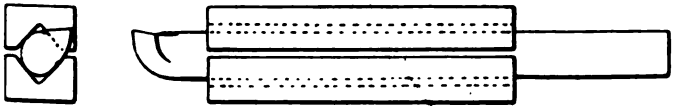

Fig. 271.

and having its opposite end cut to fit the angle of the cutter, against which it is pressed by the screw. The body of the bar is formed of a piece of weldless tubing, and it is clamped in the

Limits to the employment of these tools come in with increasing depth of hole, due to their overhang. The same type as Fig. 264 is retained, however, for deep holes, either by

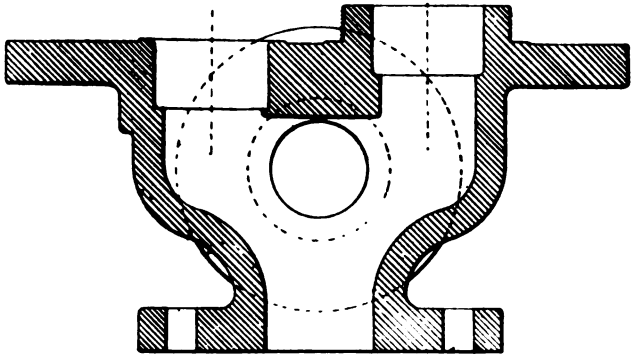

Fig. 265.

making the tool shank very massive, or, more economically, by fitting a loose tool point in a stiff bar of common iron or steel (Fig. 266), or having the end bossed out (Fig. 267). By this

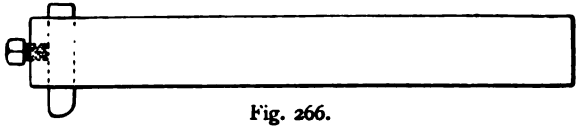

Fig. 266.

simple, even if apparently somewhat clumsy device, holes are regularly bored up to about 30 in. deep. It is not quite so reliable and accurate as a boring bar held between centres, due to the spring of the bar, and the effects of slight want of truth in the alignment of ordinary lathes, but it serves for a good deal of ordinary work, such as the engine guides in Fig. 268. These are clamped on the face plate, and bored thus with a single cutter. The bar has the advantage that roughing and finishing tools, or tools with any special shape, can be rapidly interchanged without troubling to take the bar out of the slide rest.

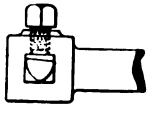

Fig. 267.

The square tool is fitted in the bar either at right angles, as in

Fig. 266, or diagonally. The latter is necessary when the tool has to cut in front of the bar, when, to avoid the interference of the tool bar and of the pinching screw with the end of a blank hole being bored, the device of Fig. 269 is adopted, the tool being set at an angle, the point coming beyond the bar, and the head of the set screw on a sloping face.

A refinement of the latter, comprising

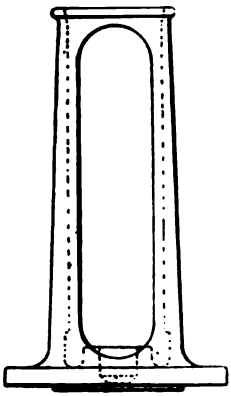

Fig. 268.

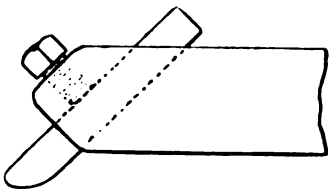

Fig. 269.

a boring tool holder in which the cutter is at an angle, is shown in Fig. 270. Here the set screw at the front is abandoned, its

Fig. 270.

function being supplied by one at the back. Pressure is exercised by this through a loose steel rod A, fitting the hole in the bar,

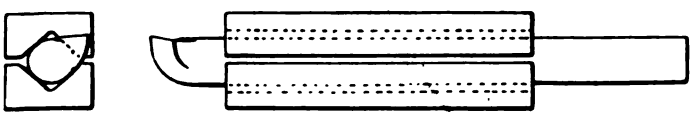

Fig. 271.

and having its opposite end cut to fit the angle of the cutter, against which it is pressed by the screw. The body of the bar is formed of a piece of weldless tubing, and it is clamped in the

rest by means of vee'd or of concave blocks. The reason of this latter device is as follows:—

The common solid boring tool with square shank to be clamped under the plates of the rest (Fig. 264), and having the remainder tapered down towards the cutting end, is not an ideal form. It has been commonly used as long as the writer can remember, while the round-shanked tool is rather unusual, even in present day shops. Yet the advantages of the latter (Fig. 271) are great.

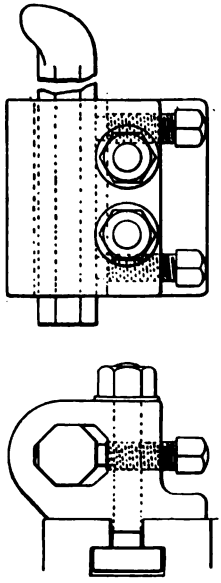

Fig. 272.

The round-shanked tool is held either in vee'd blocks or in blocks having concavities less than half circles. These blocks, enclosing the tool shank, are clamped by the screws of the tool-plate, just as a square-shanked tool would be. The screws hold the combination securely, with the great advantages that the tool can be adjusted in and out along its entire length, so that the overhang is not a bit more than necessary for boring to a certain depth, and that it can be canted to any angle to suit different grades of material, and for roughing and finishing. The angle of a square-shanked tool cannot be altered in the least degree, nor can its distance out be varied much to suit different depths of bore, unless its bottom face is flat all the way along, so that chatter will occur in cases in which it need not if the tool could be adjusted longitudinally.

Instead of using vee'd clamps of metal for round-shanked tools, a simple bored piece, saw-kerfed through on one side so as to allow it to spring, may be used. At a pinch, blocks of hard wood may be employed, though they are of no use except for very light cuts.

The American tool post is badly designed for holding boring tools. A device which is adopted is to remove the tool post, and bolt the holder (Fig. 272) in the slot in its place. Octagon bars are used for the tools, the cutting points being forged from the solid. Or inserted cutters may be employed instead. Another

form of this device is shown in Fig. 273, in which a split lug clamps a round bar.

The reamer is a finishing boring tool, and the smaller the amount which is left for it to take out of a hole, the more exact will the results be, and the longer will the reamer maintain its size. These two points are most important in a sizing tool, which is useless if not exact. As interchangeable methods increase, the importance of the reamer grows.

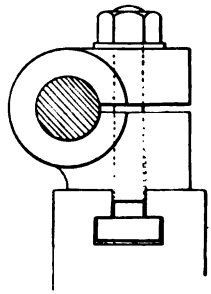

Fig. 273.

Counterbores are reamer-like tools used for boring shallow recesses with flat bottoms, as for cheese-head screws. They have a stem which just fits the hole for the screw, and the head cuts with straight or with spiral teeth.

The simple tools just considered have merely introduced us to the plainest class of boring done, in which the slide rest is the sole support afforded to the tool, or tool bar, or reamer, and in which the work is carried on the face plate, or jaw chuck. The limits imposed by length soon come in, to render other systems and devices necessary. Support has to be afforded to the work away from the headstock end, and the cutting tools have to be

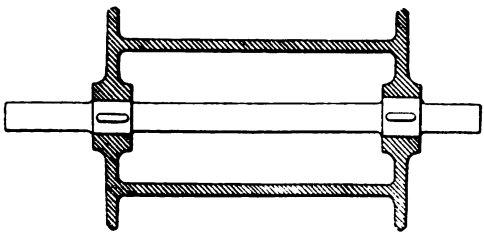

Fig. 274.

carried in a slotted bar, or in a head carried on a bar, support to which in each case is between centres.

The smaller boring bars are made of steel rods, and are slotted to carry the cutters. Larger ones are fitted with heads of cutters. The first kind are seldom made use of for holes exceeding about 6 in. in diameter. Beyond that, and frequently also for holes as small as 4 in., the second named are employed.

The slotted bars are used largely for shaft holes, length being necessary when holes occur in bosses situated at considerable distances apart, as in machine framings, or as in the holes in the crane barrel (Fig. 274). Cutter heads would not be so adaptable as cutters in bars for such a class of work. Two or more sets of cutters can also be inserted in one bar to operate in the same number of holes simultaneously.

The cutters in boring bars operate on their front, or on their outer edges. The latter are essentially lathe roughing tool points; the former approach more nearly the shape of finishing cutters, although they generally both rough and finish.

For removing metal with the least risk of springing, the roughing or round-nosed cutters (Fig. 275) are the best. But

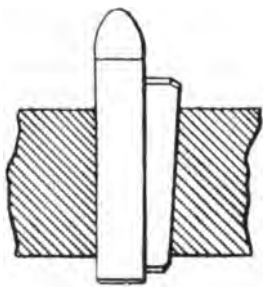

Fig. 275.

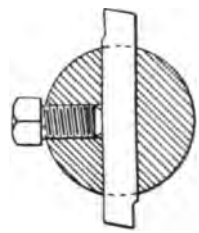

Fig. 276.

they do not size a hole so well as the flat cutters will do, since the latter cut straightforward only, and the outer edges are simply guides in the hole being bored.

The cutter shown in Fig. 275 is of square section and held with a wedge, and it has but one cutting point, so that its action is unbalanced. It is therefore not the easiest form to make, nor the best to employ. A better type is that in Fig. 276, in which a bit of round steel fits in a drilled hole, and is pinched with a set screw, and cuts at both ends. The objection to it is that it will cut but one diameter, and will soon lose its exact diameter by regrinding, and that there is no means of setting it centrally except by careful measurement. Still, both these forms are used largely, and are very useful in the shops, especially as roughing tools. Differences in diameters are met by keeping large stocks

made from steel of the same section, which can be inserted and changed quickly.

The flat cutters (Figs. 277 and 278) are used as frequently as the others. They cut by their front corners only, and the outer edges simply follow and smooth the hole, and help to steady the bar in its cut. They are fitted with wedges of the same width as the cutter (Fig. 278).

The difference in the two fittings is, that in Fig. 277 there is no means for setting the cutter centrally, while in Fig. 278 it is notched to fit the diameter of the bar, and therefore always drops

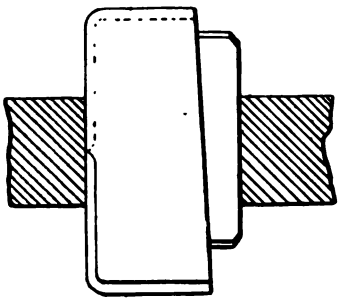

Fig. 277.

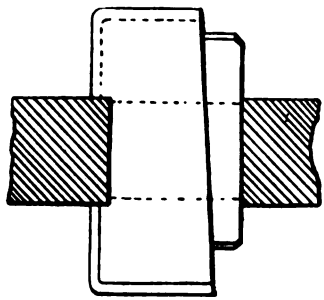

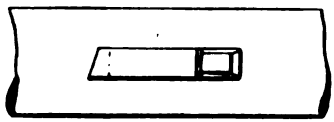

Fig. 278.

into one position. It cannot possibly slip under heavy cutting, which Fig. 277 may do.

Most cutters, perhaps, are made like Fig. 278, and to get over the objection of fixed diameter, a large stock is kept. But the notch will only fit bars of one size, which again is a drawback, while Fig. 277 can be used in bars differing considerably in diameter. Cutters like these are sometimes used as single-ended ones, but not very often, because the strain on the bar is severe, tending to bend it and push it away from the cut. Frequently these are used as facing cutters for the ends of small bosses, as on those in Fig. 274, thus avoiding the rigging-up of a star feed arrangement for a small face.

An objection to having square corners in cutters like Fig. 278 is that the fit of the edges is not preserved perfectly. This can be avoided by bevelling the ends (Fig. 279).

Wedging cutters, though so commonly practised, is rather a crude and clumsy device, and the necessary hammering done is detrimental to the truth of the bar. Screws may often stand out more than the wedges, but in many cases this does not matter. Hence the reason why screws are often substituted for wedges.

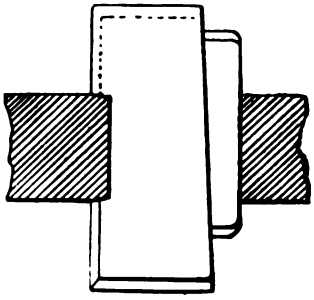

Fig. 279.

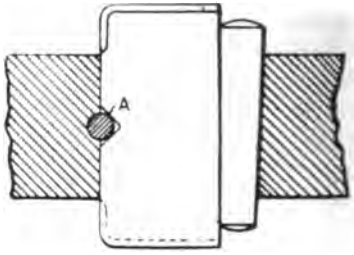

Fig. 280.

The bar may also then be made hollow, and a rod forced through against the cutter by a screw at the end. Another method is to fit reverse wedge pieces behind the cutter, and draw these together by means of a screw, so jamming the cutter firmly.

Cutters in boring bars of the same size should be interchangeable, so that any such cutters will fit any bars in the shop. And one advantage of the flat-nicked cutters is that they can be so fitted.

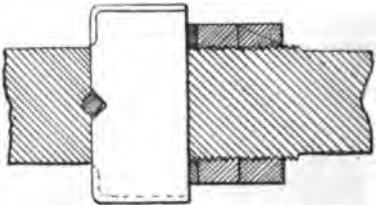

Fig. 281.

In any case, in fitting cutters it is necessary to be sure that not only will they not shift in working, but that they can be inserted after removal, in the exact positions they occupied before. The notching arrangement is perhaps the best of all, as it does away with the trouble of testing or measuring, and automatically locks the cutter true. To avoid the risk of unwittingly changing the cutter end for end in its slot, a centre pop is made on the cutter, and one on the side of the bar which matches it.

Simple devices for centring and holding the cutters in small bars are shown in Figs. 280 and 281.

Fig. 280 shows a cutter held with a wedge against a centring pin A. The latter fits half way in a hole in the bar, and half way in a notch in the cutter, which is vee'd, being rounded at the bottom to avoid weakening the cutter. In Fig. 281 the pressure against the pin is effected by a nut encircling the bar. Each device is reliable and simple. The method of securing the cutter with a nut in preference to a wedge driven with a hammer is to be recommended, because no distortion, or other damage can result. And when a loose washer or collar is interposed, as in Fig. 281, the face of the nut does not become worn by friction against the edge of the cutter. A second nut serves to lock the whole fastening against slackening due to vibration.

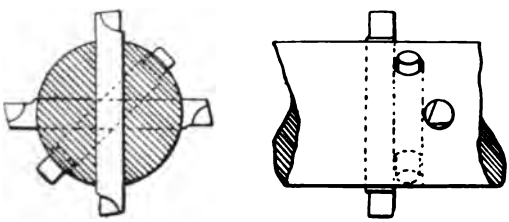

Fig. 282.

A device suitable for small bores is shown in Fig. 282, in which two round steel cutters are set through holes in a bar, drilled at right angles. They are held with a round tapered key driven through a hole at an angle of 45° to make contact with both cutters. As the cutters operate at both ends, they bore a fixed sized hole, either as roughing or finishing. The advantages are that the bar is cheaply made, and that the cutting forces are so well balanced that the tools will not readily follow a crookedly cast hole.

None of these cutters are suitable for continuous bores if close accuracy is required, but for comparatively short bores they answer very well. They are used on boring machines as well as on lathes, several slots being made in long bars at intervals. Bearings in drums, cheeks, and frames of various kinds are bored thus. Axle boxes are commonly bored with a bar and single

cutter, but generally on a boring machine. Only as a makeshift job are they done on the lathe.

A boring tool, in which several ideas are embodied, is illustrated in Fig. 283. It comprises a centring device, and separate cutters for roughing, and finishing. The cutters A, B, are inserted in slots cut in a bar at right angles, one cutter

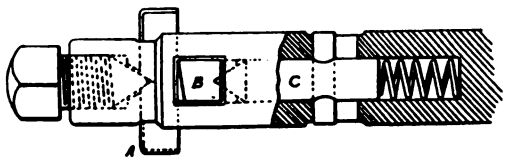

Fig. 283.

coming into contact with the other. The roughing cutter A is centred by the pointed set screw, the finishing cutter B by the plunger C, which is pressed downwards by a spring enclosed in the bar. The two cutters are forced against the resistance of the spring by the set screw. The plunger is pushed back to remove the cutter by the pin, which is inserted through it.

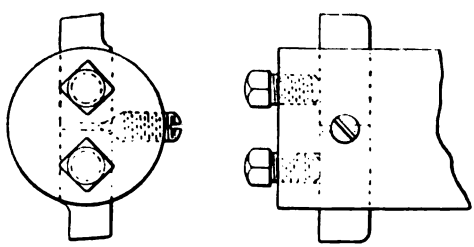

Fig. 284.

The difference in diameter of the roughing and finishing cutters may be about $\frac{1}{16}$ in.

Two cutters set one in advance of the other for roughing and finishing need not be very nearly of the same diameter. If the bar is well supported, a difference of from 1 to 2 in. can be made, but then the feed must be fine.

Boring tools suitable for use in turrets are shown in Figs. 284 and 285. The first shows cutters adjustable by means of a

pointed end screw, and clamped with other screws at the end. In the second, two round pieces of steel are inserted in holes in the head, and each is clamped with a single set screw.

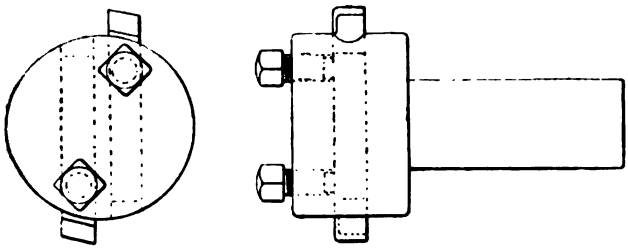

Fig. 285.

Fig. 286 illustrates a boring tool, or reamer used in Willans & Robinson engine cylinders. These reamers have each two cutters *a*, *a*, set opposite each other, and inclined in their slots at an

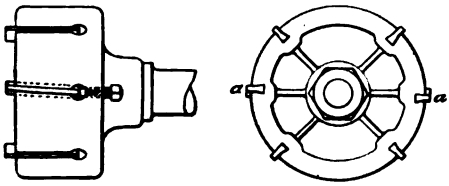

Fig. 286.

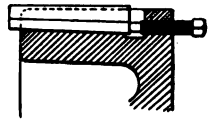

Fig. 287.

angle of 3°. The other inserted pieces are guides to fit the finished bore, with which they make contact. The front lips of the cutters are set a little in advance of the ends of the bearers. It will be observed that the guiding strips come diametrically opposite each other, as do the cutters, with the odd-looking result that there is a large space unoccupied on the sides farthest from the cutters. Fig. 287 shows how the cutters are set forward in their grooves to compensate for wear.

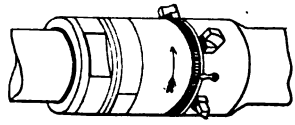

Fig. 288.

A novel form of boring bar of German design is shown in Fig. 288. The special feature is that the four cutters are adjusted

simultaneously by a face screw, or scroll like that in a chuck, the faces of each cutter being threaded to suit. The edge of the joint is graduated for exact setting.

A bar for boring car wheels, in which the cutters are simultaneously adjustable for radius is shown in Fig. 289. It is altered by screwing a tapered or conical piece up or down, and bevelling the inner ends of the cutters to fit the cone.

Holes which are concentric with one another are bored truly by means of two-cutter heads on the same bar, the heads being made in one or separately, as most convenient.

Cutters are seldom mounted in slotted bars and pinched therein with wedges or with set screws when holes exceed about 3 in. diameter. Beyond this the bars chatter, and the action of the cutters is too slow. Hence the reason why the head of cutters is employed for boring larger holes.

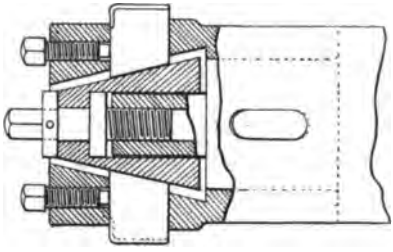

Fig. 289.

A fixed boring head may be formed solidly on a bar for repeat work, but it is generally made as a separate fitting and keyed on. The head is often of cast iron, sometimes of forged steel, and the cutters are either secured with screws or with wedges. Screws are mostly adopted with round pointed tools of the roughing type; wedges with broad finishing tools, which, however, are frequently employed for both functions. As the heads increase in size, the number of cutters is generally multiplied, the object of which is the better balancing of the head in the bore, and the more rapid operation of boring. In order to facilitate the latter, the cutters are set each a little in advance of its fellow, to cut in succession. If they were all in the same circular plane, the first one would do all the work, and the rest would be cutting wind. Setting them in advance, the cutting is divided between all, and though a coarse feed is taken in the aggregate, each cutter has but a slight duty to perform.

But the strain on a cutter head is very severe, and therefore it is not advisable to insert the cutters very closely, or to make the

depth of cut, or feed too heavy. The cutters, and the work will become hot, and the latter will be distorted.

Though, up to a reasonable limit, cutter heads can be mounted on bars, when the disproportion in diameter becomes excessive, the bar vibrates severely under the stress of boring. Then some support must be given to it, besides that between centres, or else the regular boring bar must be substituted.

One way in which a boring head is steadied when the job permits of it, is to make the bar and a small hole in the casting, a close running fit, so that the hole becomes a bearing to the bar. This is done in boring some engine cylinders (Fig. 290), which are cast solidly with their guides, the bar fitting in the hole that receives the bush for the rod. Many other portions of mechanism have convenient holes which serve this purpose. The value of

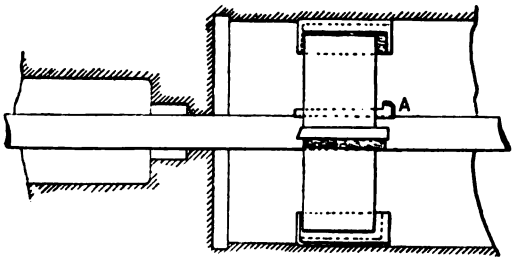

Fig. 290.

such an aid will be evident when the fact is fully understood that true boring like turning, is mainly a question of the rigidity of the tools. And if to the support afforded to the bar by a hole, there is added a wooden disc on the bar, following the tools in the bored hole, very heavy cutting, and true boring can be done. This is a block of hard wood turned to fit the hole, and keyed on the bar a little way behind the cutter head to serve as a steady to the latter.

It is usual to fit slips of hard wood in grooves in the head (Fig. 291), alternating with the cutters, to absorb tendency to vibration.

Cutter heads, which are fixed on bars, are fitted by means of a key (Figs. 290, 291, 292, and 294), which permits the head to be set in any longitudinal position on the bar, the key either fitting on the curve of the latter, or on a flat, or preferably in a groove cut

along the bar. The bore must make a close, yet easy, fit on the bar, to permit shifting the head along without trouble. Slop must not be permitted, but it is liable to develop in course of time. A good practice, which obviates trouble due to slackness, is to split the

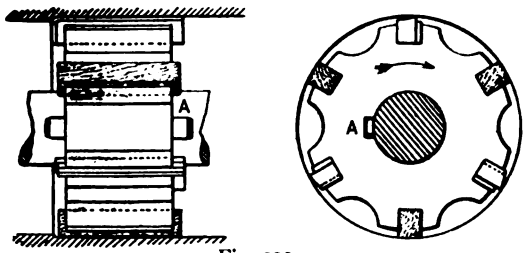

Fig. 291.

head on one side, and tighten it with a bolt, or a couple of bolts (Fig. 292). The splitting has a slight tendency to induce vibration, and interferes with the setting round of the cutters, if more than three are used, but it is nevertheless a good device.

In the fast heads, seldom more than six cutters are used, nor less than three. Four is a frequent number, and they perhaps bore more truly than three. But three are as efficient as four if steadying blocks are fitted in the head, as in Fig. 291, midway between each cutter, so keeping the latter to their work in holes of irregular shape, and also lessening the tendency to chatter. An object to be borne in mind when arranging cutters is to make them mutually counterbalance. Another point is to increase the number of cutting edges, with the view to securing greater aggregate results. There would be no such gain, however, if the cutters were set to operate in the same circular plane, as mentioned previously. If there are six cutters, each one should be

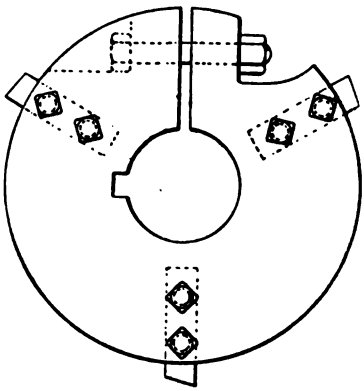

Fig. 292.

set to divide the feed during a revolution between them. Sometimes tools of different shapes, suitable for roughing and finishing, are combined in the same head, at the same time.

The straight wedged cutters (Fig. 291) have an advantage over those which are held with set screws or with clamps, because they make a bedding fit in the head; and once fitted in their seatings, they cannot shift, either endwise, or radially. Endlong movement is prevented by the shouldered end.

In making these, the cutters are fitted while unhardened, and turned up in the lathe. The ends are then filed back to cut in succession, and backed off, and the side edges are also backed off, after which the hardening is done. Each cutter is centre popped with one, two, or three dots respectively, and the head adjacent popped similarly, so that when the cutters require to be re-sharpened they will go back into their proper grooves; or figure stamps may be used if available.

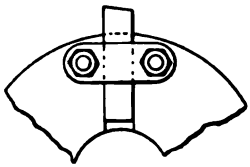

Fig. 293.

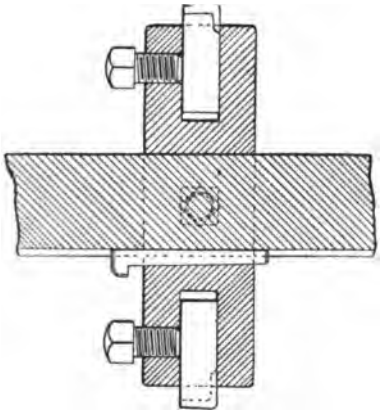

Fig. 294.

The cutting is done by the front corner, the parallel edges only following and smoothing the hole.

Illustrations of cutters held by other clamping methods are shown in the following figures.

Fig. 293 shows a very common method. The tool points fit in recesses in the face of the cutter head, in which they are clamped, each with a flat strap. The tool is a trifle thicker than the depth of the recess. Fig. 294 illustrates a head in which recesses are cast, or cut in the body. If cut, they are cleaned out with broaches to size, or slotted. The tool points are pinched with

set screws. In Figs. 295 and 296 the recesses are made in the face, and in the body respectively, but the tool points pass through straps with screwed tails, which tighten the tools up efficiently.

Tool points are also clamped by bolts running in circular T-grooves on the face of the head. Fig. 297 shows another design, in which the tools are held between the head and a loose

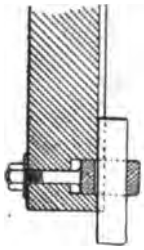

Fig. 295.

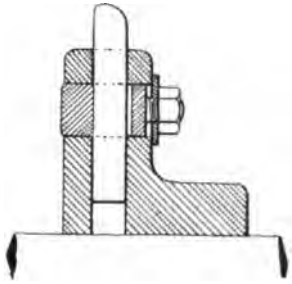

Fig. 296.

cap. The head A is recessed, and the tools stand up a little beyond its face, to be clamped by the plate B. The screws C, C, permit of effecting minute radial adjustments.

Boring bars are rather expensive to make, and therefore one has to do duty for as many different heads as possible. A small bar would be the most generally useful to take small work, but

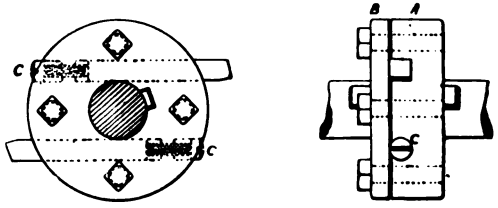

Fig. 297.

the largest possible is better from the point of view of rigidity, for long bars will vibrate unless the cutting forces are properly balanced. A mean has to be struck therefore, or more than one bar must be made. The latter plan should generally be adopted.

Whether one or more bars are used, there must be several boring heads of different sizes, one for almost every different job, because in no case can the cutting tools be permitted to stand out

far from the head. Sometimes the difficulty is got over by making a larger head to fit around a smaller one, fitting the two together with keys. In other cases the cutter heads are bolted to a flange on the sleeve.

A disadvantage of the fixed boring head is that the work must be travelled past it, since the bar is mounted between centres. This becomes more objectionable with increase in length of the work, because it conduces to inaccuracy, and it is, moreover, an awkward arrangement to carry a long and massive piece on the saddle of the rest. The bar also must be considerably longer than the hole to be bored, in order to enable it to pass through the bore, and reach the lathe centre on the other side.

And in any case, when dimensions of 8 or 10 in. are exceeded, it is better to abandon the cutter head keyed on a bar, for the regular boring bar of cast iron with traversing head (Fig. 298). In this, the body of the bar is of large diameter, and stiff, and the work is not traversed, the head of cutters alone moving longitudinally.

Large sleeves must have long nuts A (Fig. 298) for the traverse screw. The bar should be key-grooved on the side opposite to the screw recess, and a feather or key B attached to the head, to slide in this keyway, and so drive the head round. If the sides of the nut also fit in its groove C, the conditions are favourable to an axial drive. The value of this is greater if the fit is not perfect between the sleeve and the bar, due to slack fitting in the first place, or to wear.

In Fig. 298 the long boss on the cutter head conduces to stability. The head is grooved for wedged cutters of the kind in Fig. 291. The screw is carried in bearings D, D, which are fitted in the groove C at the ends, and let in flush, being fastened with sunk screws. E is a double carrier by which the bar is driven. F is the star wheel by which the screw is turned directly. The bar is cast solid, being one of 6 in. diameter. When much larger than this, it would be made hollow.

In Fig. 299, instead of grooving the bar to carry the screw, the latter is placed outside, a little way from the body. Bearing blocks A, A, are keyed on, to take the screw at each end, and the latter is driven by the star wheel at the right-hand end. The boring head B is provided with a key, attached to it with set screws, and this slides in the groove in the bar, so turning the

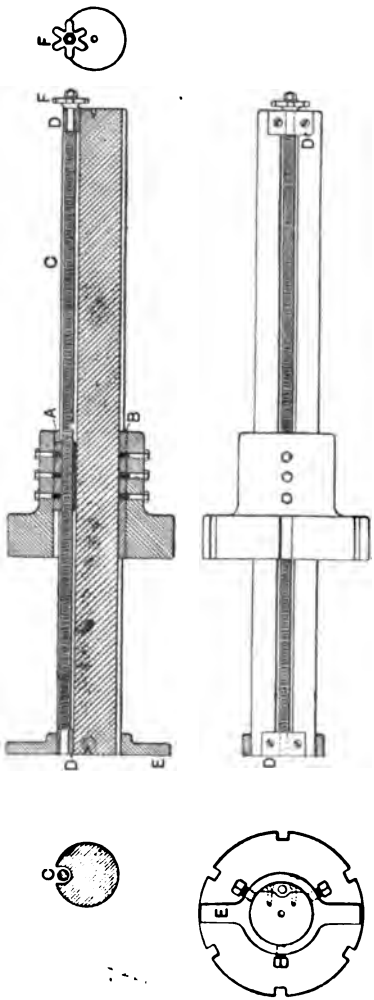

Fig. 298.

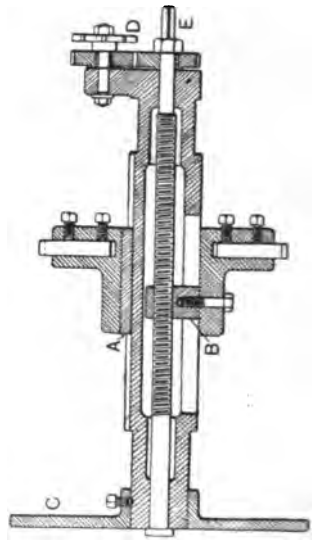

Fig. 300.

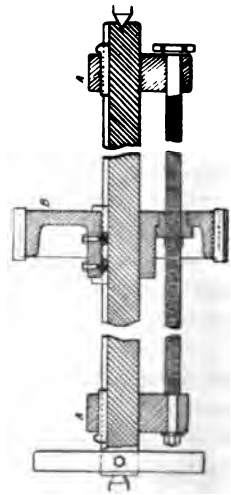

Fig. 299.

head with the latter, without causing strain to the screw. The cutters are wedged in. The entire affair is driven with the double-ended carrier on the left. This is a less expensive bar than the previous design.

Fig. 300 shows a boring bar devised specially for boring electric motor frames, made in halves, but which is adaptable to other interior work, in which the frame is divided longitudinally and bolted together.

The bar is a hollow casting, carrying the head, in which the tools are pinched in radial slots; a boss on the head fitting the bar gives stability by its length. It is driven by a key A and by the sides of the nut B, which passes through a slot in the bar to the centrally situated feed screw. The bar is driven by a carrier C, the arms of which are in contact with pins on the face plate. The screw is fed by the star wheel D, through equal spur wheels. A crank handle is slipped on the squared end E, to run the screw back and for adjustments. The bar runs in the bearings of the frame which it is boring by the turned portions near the ends.

The star feed is a simple and efficient device for effecting the traverse of screws in bars of medium dimensions. But all bars of large size are gear driven, the object of which is the same as the star wheel—namely, to feed the cutter head longitudinally. Changes in feed can be accomplished by changing wheels. The action of this feed is that during one revolution of the bar the feed screw is turned by a definite amount. The geared bars differ, therefore, from the bars first shown, in which the work is traversed past a head that does not move in the longitudinal direction, and also from the second class of bar, in which a simple star feed turns the screw at a uniform rate per revolution at a certain stage of the same, for the geared bar feeds continuously.

The boring bars of the geared type are usually of a more massive character than those in which the feed screw is operated without the intervention of toothed wheels. Often they are set vertically, in which case they lie outside the range of general lathe work. These bars are used in two ways: either as portions of the fitting of a lathe, or boring mill, or as portable mechanisms attached with a spider to the end of a cylinder, which may also be detached either in course of manufacture, or bolted to the mechanism of which it forms a portion, the portable bar being then attached to it for re-boring.

The larger boring bars used in horizontal lathes, when star fed, are driven between centres on the slowest speeds, and with back gear in. But it becomes necessary in the case of the most massive bars to afford more adequate support to them than the centres can give. The bars are of great length, and their heads are very massive, and what is more distressing is the strain of cutting. The fitting of gears also interferes with centring. It is therefore necessary, in a horizontal lathe, to provide independent journal bearings, and to turn journals on the bar to run in them. Many cylinders ranging from about 6 to 8 ft. in bore are done in this way, in the absence of a vertical boring mill.

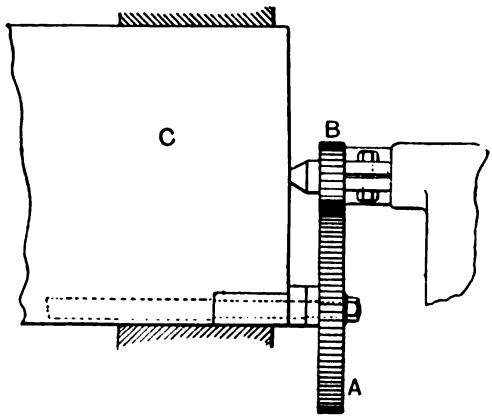

Fig. 301.

The awkwardness of boring work in the lathe is largely due to the fixing up of pieces of different depths without the aid of a vertically adjustable table, like that fitted to regular boring machines. Sometimes the saddle is utilised for bolting cylinders to, which is the primary object of the slot holes cast in the ends of the carriage. If a job is too shallow to rest directly on the carriage, packing blocks of wood or iron can be used. If too deep, the carriage must be moved out of the way and the work go on the bed, with such packing as may be required. If too deep to go on the bed, it must be sent to a lathe of higher centres. For the biggest cylinders, therefore, a face lathe must be used. This may be one of those with a movable poppet fitted as an adjunct on a short bed bolted to a base plate, though the poppet

will only be of use when the centre is required. The base plate is utilised to receive the bearings for the bar. As these bearings are readily removable, they are made for permanent boring service on one or two of the big face lathes in the shop, and any cylinders beyond those of medium dimensions, such as will go on lathes with beds, are sent to the face lathe, or lathes to be done in this fashion.

There are two methods by which big boring bars are fed: one by epicyclic gears, the other by differential gears, the latter being the method mostly adopted.

In the epicyclic device (Fig. 301), the feed is due to the rotation of the wheel A on the end of the feed screw, around the

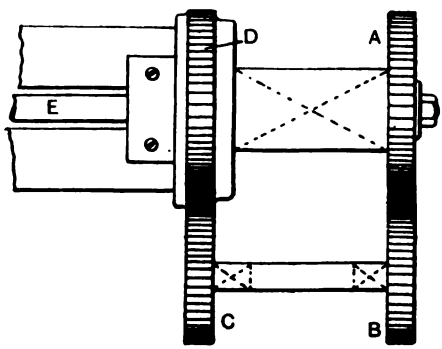

Fig. 302.

pinion B, clamped or otherwise securely fixed on the mandrel of the loose poppet. The amount of feed per revolution of the bar C depends on the relative diameters of A and B, coupled with the fact of rotation. If A and B are equal, A will make two revolutions on its axis during a single turn of the bar. A is made larger than B to lessen the amount of feed. This device is not so convenient as the next one, in which differential gears are adopted, and in which a finer feed can be obtained in a more snug and self-contained arrangement. Boring feeds are always fine, though the depth of cut may be deep.

The differential gears used comprise a train in which there is a difference of from four to six teeth usually in a pair of the wheels, sufficient to impart a feed more or less fine.

The principle is illustrated in the diagram (Fig. 302), which

shows perhaps the earliest form of this device, since modified somewhat, without affecting the fundamental idea. A spur wheel A, keyed on an extension of the bar, engages with a wheel B on a shaft on which is keyed another wheel C, having a few teeth less than B. C gears with an annular wheel D, having the same number of teeth as A. D is loose on the bar The others are fixed, A on the bar, and B, C on their shaft. The internal teeth on D are equal in number to the external. These internal teeth of D engage with a pinion on the end of the feed screw E.

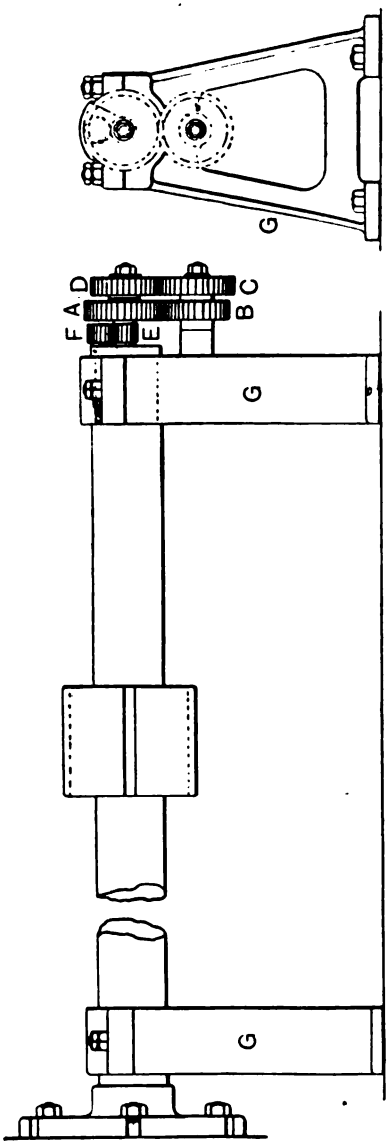

Fig. 303.

If the wheels A and D had 64 teeth, B 36, and C, say, only one less—35—the pinion 16, and the screw was of $\frac{1}{2}$ in. pitch, then the wheel D would be kept back relatively to the others by an amount equal to one tooth—in this case one thirty-sixth of a revolution during one revolution of the bar. As the pinion of 16 teeth is geared 4 to 1 with D, the pinion makes one-ninth of a revolution—a quarter of a thirty-sixth. Consequently the screw moves the cutter head through one-ninth of $\frac{1}{2}$ in. $= \frac{1}{18}$ in. If the screw were of 1 in. pitch, the cutter head would travel $\frac{1}{9}$ in. during one revolution of the bar.

In such a design the feed per revolution is constant. But as the lathe is capable of various speeds by cones and back gears, the finishing traverse can be taken at a higher speed than the roughing; and the traverse, though not increased in amount per revolution, is accelerated in speed to the accompaniment of the increased boring rate.

With regard to the arrangements of the differential gears, it is clearly a question of convenience only. They are perhaps seldom now placed as in the diagram Fig. 302, but generally on the lines of Fig. 303. In some cases the two fast wheels adjacent run on a

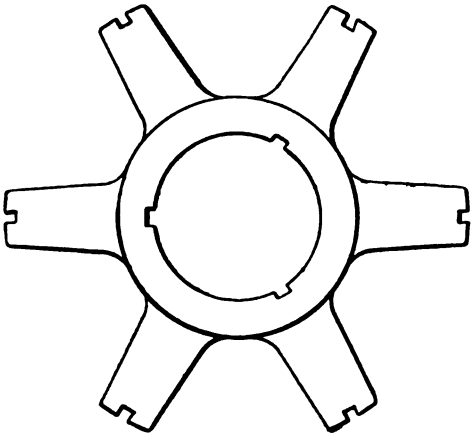

Fig. 304.

short shaft which has its bearings in a small bracket, in others, as in Fig. 303, on one of the bearing brackets G, G.

The pinion is not made to gear with an internal ring of teeth here, but the practice is to have two equal pinions—one E on a shaft in the axis of the bar, the other F on the feed screw. These are generally put close to the end of the bar. In one example the body of the bar was slotted out to receive the pinion of the screw.

In Fig. 303, D, fast on a shaft at the end of the bar, drives C, fast on the same shaft as B, and this drives A, which is fast with E, which drives F. C and A have 44 teeth each, and B and D 42 teeth each. The screw is of ½-in. pitch.

It would not be necessary, except for practical reasons, to have a pinion to drive the feed screw, since the loose wheel might have its boss threaded to fit the lead screw, and so draw the latter through it. But this method is objectionable in most cases, due to the overhang of the screw when drawn out, and it is only applied in certain cases where a short travel occurs.

The tools used in the cutter heads are similar to those previously illustrated, being either held with wedges or screws. Figs. 304 and 305 illustrate two cutter heads, the second showing

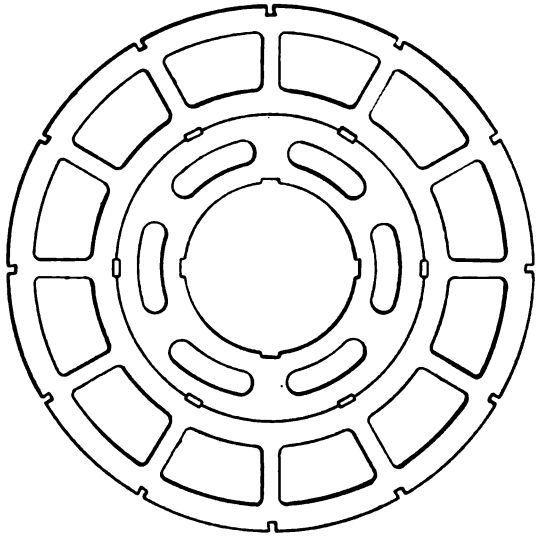

Fig. 305.

how a large head is keyed round a smaller one; besides these there are other methods of fitting, such as bolting to a flanged boss which embraces the bar.

Differential boring bars are fitted between lathe centres resembling in their general design those of similar type for horizontal cylinder boring machines. A pedestal is frequently supplied to bolt to the lathe bed, to carry the differential gears.

Though not in strictness a lathe, the cylinder boring machine must be noticed here. In the horizontal machines there is a bed plate carrying a fast and loose head by which the bar is carried. It

is attached to the driving spindle in the fast head by a flange, or a taper, and runs in parallel or taper bearings in the loose head. The drive in modern machines of the larger types is by worm gears, as being slow, steady, and powerful. Different rates of drive are obtained by a stepped cone on the worm shaft. The head or heads are moved along the bar by differential gears. In

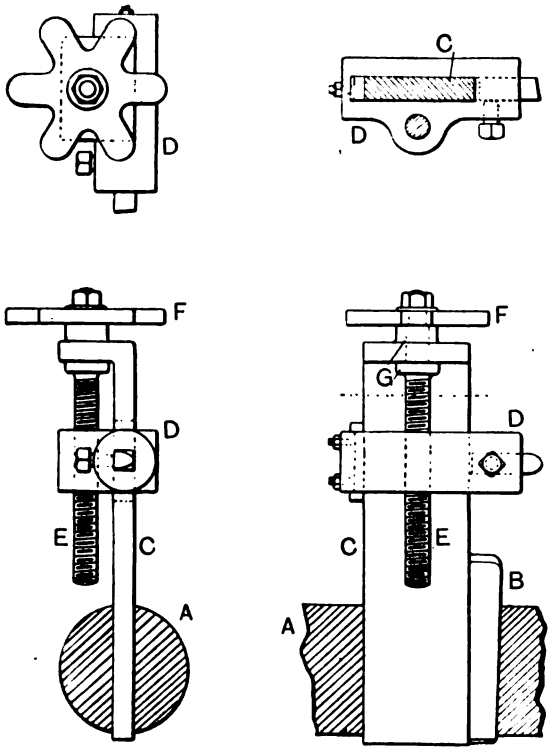

Fig. 306.

some machines reversing gears are fitted for boring in either direction.

If a big boring bar is only used at long intervals, it should be rubbed over with tallow before being put aside. All the turned length, and the screw, and slides of the facing arms are thus treated,

Facing arms are attached to boring bars for facing the flanges of cylinders, &c., at the same setting as that at which the boring is done, and also for turning the outsides of flanges. They are either single, or double ended. The arm carries a slide rest, simple or compound, in the more complete design, the feed screw

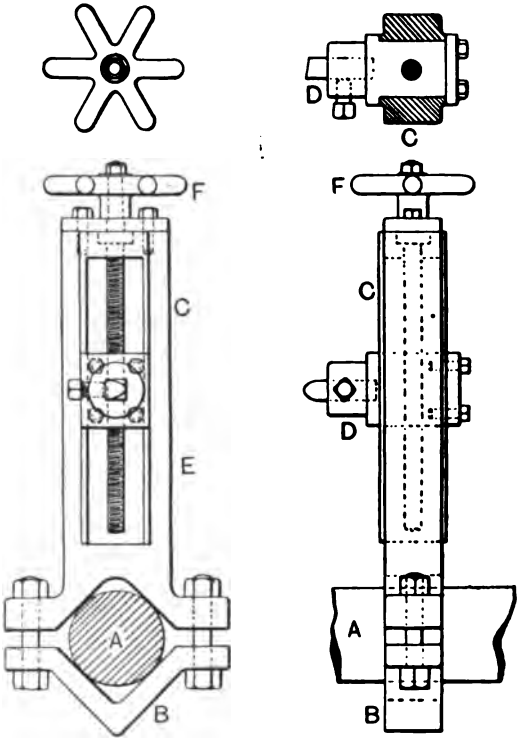

Fig. 307.

being actuated by a star wheel. A single arm, when massive, should be counterbalanced.

The value of the arm lies in the fact that it faces the flanges of cylindrical work while the latter remains in the position where it has been set for boring. The arm is clamped on the bar with a loose cap in the position required for facing. A slide face on the arm with vee'd edges receives a tool holder, which is moved along

the slide by a screw, as in a lathe rest. The screw and block are adjusted more rapidly by turning the star wheel by hand, or fed automatically by the wheel, struck and moved a distance of one tooth by a pin or block conveniently placed.

Facing arms of simple designs are fitted to the boring bars slotted for cutters, as well as to those with heads. In some cases they are made to pass through the slots; in others they embrace the exterior of the bar, examples of which are shown in Figs. 306 and 307.

The first named are rather flimsy, but they are suitable for light cuts on small work, and are convenient. The second are better, the vee fitting gripping the bar well, and are adaptable to a small range in sizes, which a semicircular grip would not do. The details of construction are clearly shown in both figures. A represents the boring bar, the arm C being wedged with B in Fig. 306, and gripped with the cap B in Fig. 307. C is forged steel flat bar in the first figure, while it is a casting in the second. D is the cutter block, actuated by screw E, fed by the star F. G is a collar.

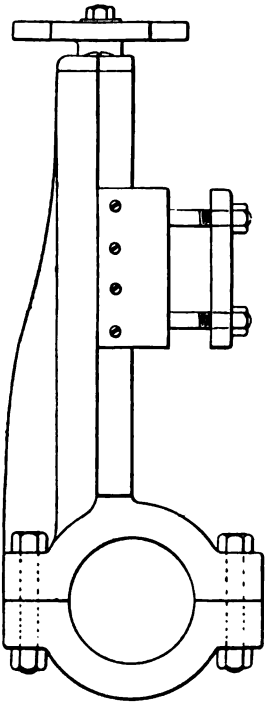

Fig. 308.

Two larger arms are shown in Figs. 308 and 309, single and double respectively, the second being fitted with compound tool slides. Fig. 309 is cut back to bring the cutting tool on the diametral position.

Facing cutters operated by star feeds are often improvised in this way:—The top slide of a slide rest is taken, and fitted with a special tool holder for carrying the facing cutter. The slide is bolted to the face plate, and the star feed moves the slide and tool once during each revolution. The front slide of a planing machine tool box may be taken, and fitted with a tool holder, and used similarly.

Flat cutters are frequently used for facing bosses in the lathe, so avoiding the trouble of fitting up a star feed for a little job.

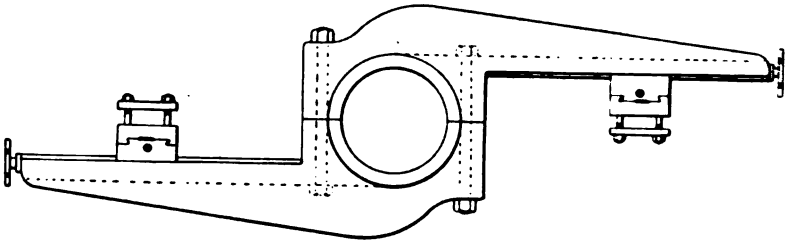

Fig. 309.

The work, being bolted to the carriage, is fed up lightly to the cutter. The latter is wedged or held with a set screw in the bar similarly to the ordinary flat boring cutters. A similar device

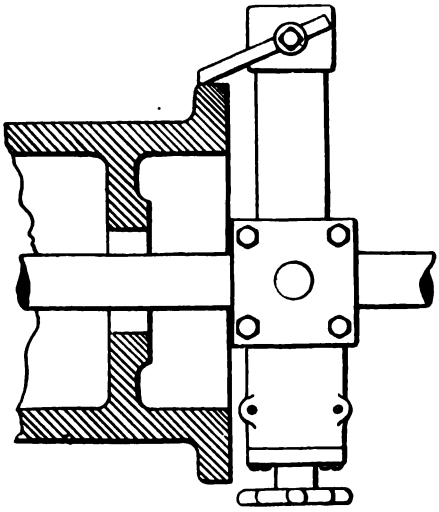

Fig. 310.

may be used for turning a narrow flange, a cutter being rigged up in a tool holder on a facing arm.

An operation that often has to be performed at the same setting as that for boring is turning the outside edges of flanges.

Sometimes this is done at a stage previous to boring, the work being centred for the purpose. But this is either impracticable or inconvenient, or in many instances, wasteful of the time occupied in two chuckings. The general practice, therefore, is to feed a tool across the edge, gripped in the facing arm, putting on the feed by hand; or else, if the work will permit of it, as when carried on the saddle of the rest, to feed the latter along. Fig. 310 illustrates the application of a facing arm, the tool projecting out over to reach the edge of the flange. In the case of a boring machine the bar is fed through the cylinder by which the turning is done, but the same thing is effected if the cylinder travels instead.

Taper boring is done in various ways: short tapers from the slide rest, swivelled for the purpose; long ones by means of bars. The latter are not required nearly so frequently as the former are.

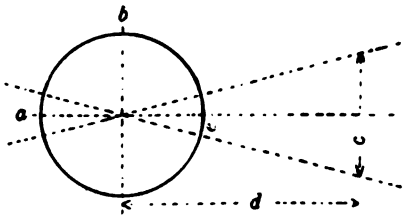

Fig. 311.

Boring from the slide rest is the better way when practicable, and it can be done up to, say, 2 ft. or 2 ft. 6 in. in depth, using a stiff lathe and a tool bar of $2\frac{1}{2}$ or 3 in. square section, and cutting rather lightly. The bars previously illustrated for deep parallel boring are equally suitable for taper bores; the angles can be readily obtained, and a number of similar pieces can be bored at the same setting of the rest. If the circular base of a slide rest is not graduated into degrees, angles can be set by the aid of a diagram, giving taper per foot. The base of the rest (Fig. 311), should have two lines *a*, *b*, marked on it at right angles, to indicate when the circular foot is parallel to and at right angles respectively with the axis of the lathe. Any angle *c*, per foot *d*, can then be obtained by marking it out first on a board and then taking the distance *e* on a circle of the same diameter as that of the base.

The latter can then be set and clamped at the angle. Another way is to set a bevel by the edge of the rest, and a parallel shaft put between centres for testing by. Slight error is easily made in any measurements, and therefore the work must be checked at each end after a rough cut.

With respect to the use of bars between centres for boring tapered holes, there is often some initial misconception and difficulty experienced about this work. Trouble soon arises if the attempt is made to bore such holes by setting the tailstock over as for taper turning. On the face of it, it seems correct to set the loose poppet over, on the assumed ground that what is right for turning must be correct also for boring. But the two operations are of a different character.

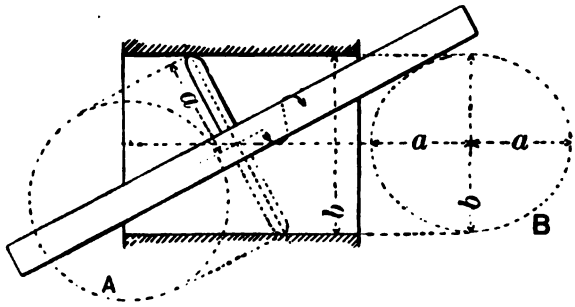

Fig. 312.

Two things are essential for boring a tapered hole with a bar between centres. One is that the bar shall move in a circular path at the fast headstock end; the other that the tool shall be fed along the bar. In order to understand the reasons for this, let us see what would happen if these conditions were not fulfilled.

Set a bar between centres, rotated merely by the headstock, set over at the poppet end by the amount of taper required as for taper turning, and carrying a fixed cutter in the bar (Fig. 312), which shows the amount of set over, exaggerated, and the work being traversed past it. The result produced would be a parallel hole, elliptical in cross section. This is clear from the diagram, for the radius *a* of the cutter, though producing a true circle A in the angle at which the cutter stands, would not produce a circle, but an ellipse in the right angle *b* with the axis of the bore. And

since the work traverses past the cutter, the position of which is fixed, clearly there can be no alterations possible in the diameters bored by the cutter.

Now supposing that a sliding boring head (Fig. 313) carrying a cutter is substituted for the fixed tool of Fig. 312 set over as

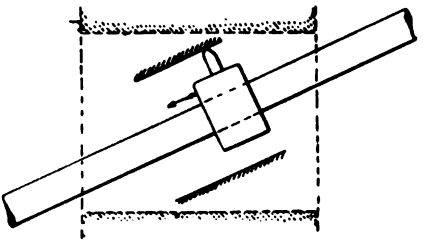

Fig. 313.

before on the loose poppet. What will result then is a circular bore, not tapered, but cylindrical, and parallel throughout.

The result in both cases is due to the fact that the centre or axis about which the bar turns does not coincide with the axis of the tapered hole which is desired. In a common boring bar,

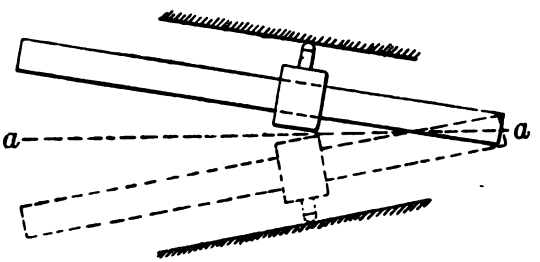

Fig. 314.

doing parallel holes, these two axes do coincide, and the same principle must be observed in taper boring.

The diagram (Fig. 314) illustrates the conditions which must be fulfilled. The bar is attached by any convenient means at the headstock end, set to the radius corresponding with the taper of the bore, and thus it describes a circular path around the centre *a a*, which corresponds with the axis of the taper or cone. The

cutter also must be fed along the bar, instead of being a fixture. In this way a tapered hole, truly circular in cross section, is produced.

The relation of this principle to that of boring from the slide

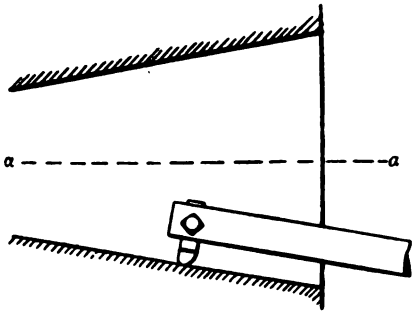

Fig. 315.

rest and that of taper turning is illustrated diagrammatically in Figs. 315 and 316.

In the first, the relation is perfectly clear, since the work rotating about its axis *a a* has exactly the same relation to the movement of the tool as if the latter were rotating in a conical

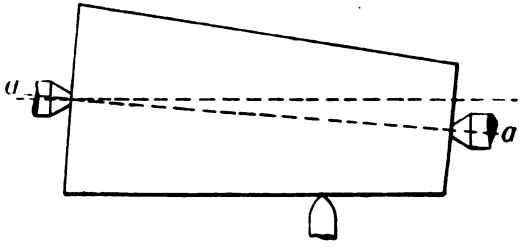

Fig. 316.

path, as in the previous figure. The case of taper turning (Fig. 316) is different. Here the *surface* being turned coincides with the line of movement of the tool, as in boring.

The practical application of these principles is seen in the bar (Fig. 317.) A centre plate A is bolted to the face plate to take the centre in a sliding block B fitting in a head at that end of the

bar, the radial adjustment of which block on the head gives variations in taper as required. The sliding head C is fed by a screw, driven from a star wheel D through gears. The relation of Fig. 317 to Fig. 314 is clear. Such a bar may be fed by bevel

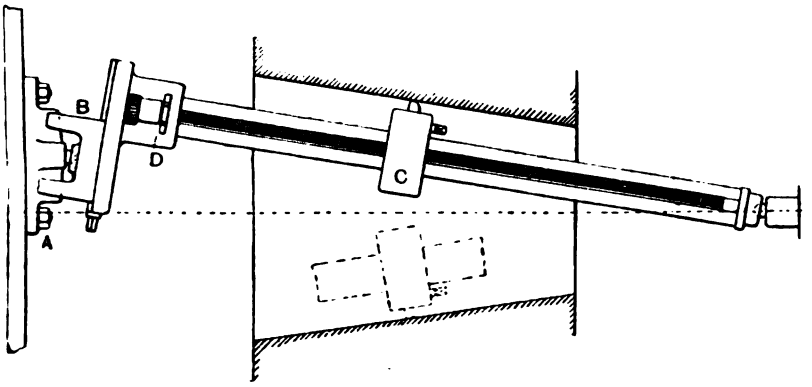

Fig. 317.

wheels, one on the mandrel of the loose poppet, the other on the feed screw, the same device as one illustrated on page 226 with spurs.

As a proper bearing cannot be got on the centres when such bars are set to angles, it is necessary to provide some sort of centre which will accommodate itself to the angular movement. This is best met by a ball and socket fitting (Fig. 317), in which point centres are discarded altogether, or by a different device in the ends of the bar (Fig. 318), a partial sphere moving easily in a recess, and retained with a clamping plate. The ordinary point centres are retained, and the ball fitting allows of movement taking place to accommodate the wobbling course of the bar.

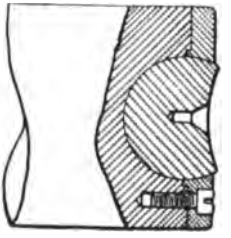

Fig. 318.

Special bars are sometimes made with sliding cutter heads, to bore one particular class of job only, and one taper only. The bar is not set over, but the taper is on the cutter head, which

moves up the tapered bar, being retained thereon with suitable vee-slide arrangements. Or, alternatively, the bar may be turned to take the sleeve, which then encircles it, though this is a more troublesome mode of fitting.

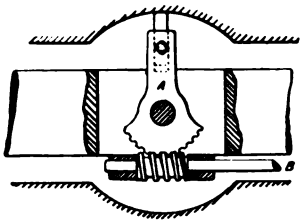

Fig. 319.

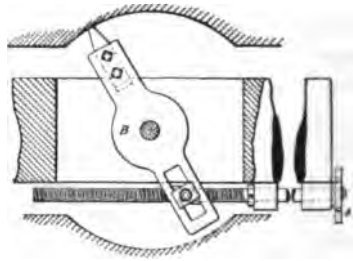

Fig. 320.

A good many methods have been designed for boring tapers with bars revolved between centres. It may be laid down as a safe rule that if a hole can possibly be bored with a tool held in

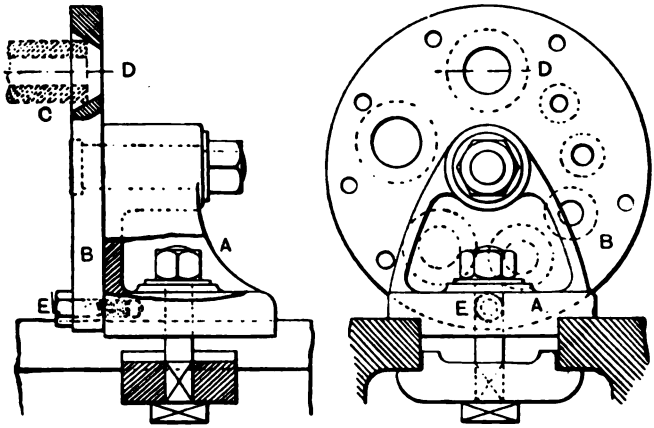

Fig. 321.

the slide rest, that plan should be adopted in preference to using the bar. Fig. 319 illustrates a bar designed for boring the concave seatings for swivelling bearings. The bar is slotted about the centre, or near one end as most convenient, in which a tool holder

A is pivoted. Slight differences in the radius of the tool are effected by pinching it farther in or out from the centre. The holder has a curved rack cut upon the edge opposite to the tool, in which a worm works on a spindle B actuated by the star feed.

In Fig. 320 a star feed A is employed to swivel the cutter holder B, upon its pivot, and so produce the globular outline in the bored seating. A sliding nut, seen in the tail of B allows for the varying angular positions which the holder assumes in its movements. Adjustment for diameter of bore is effected, as in Fig. 319, by pushing the cutter farther out, or withdrawing it.

Boring rigs include various devices, the object of which is either to support the work, or the boring bit or bar. They comprise cone plates, and plain clamping plates, or straps and bolts, and special castings within which the work is carried and centred.

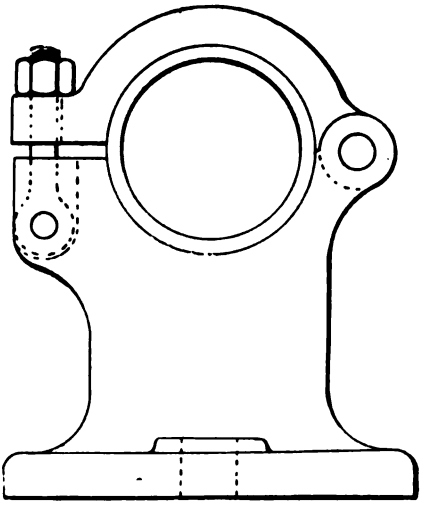

Fig. 322.

The common cone plate occurs in various forms. A good pattern is illustrated in Fig. 321. The bearing A slides along the lathe bed, on which it is clamped when required. The disc B, with the coned holes, pivots around a pin in its boss, bringing any one of the holes uppermost that suits best the diameter of the work, the centre of every hole coinciding with the height of the lathe centre. The insertion of a piece being bored is indicated at C. A set screw E locks any hole centrally by means of the hole set opposite it.

A hinged holder (Fig. 322) is useful for gripping bushes and liners of no great length which are circular outside, whether rough or turned. The objection is that such a device only holds one size of bush. But it is a useful thing to have for repeat work, as there is no trouble in effecting adjustments, and smaller pieces

can be centred by inserting loose packings, comprising either flat strips or curved liners.

Another device (Fig. 323) consists of two brackets of the form shown, with large holes cast in their undivided bosses, and fitted with set screws for adjusting the work centrally. Long pump barrels and liners can be held in the two brackets, bolted apart to the carriage of the slide rest; and it does not matter if the outside is a rough casting, to be left rough or turned subsequently. The set screws permit of minute adjustments being made to bring

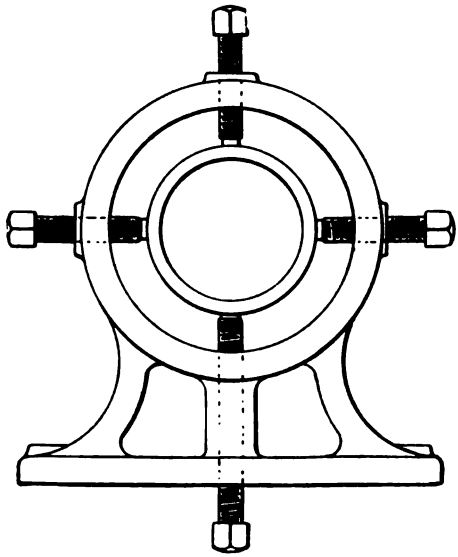

Fig. 323.

the bore central. They may be fitted with thin locking nuts if thought desirable, to prevent them from slacking back under vibration.

When lining-out work for boring it is often necessary to leave greater allowance for machining in some parts than in others, in consequence of the inaccuracy inseparable from rough castings and forgings. If the machining allowance were removed symmetrically from one portion it would frequently happen that another portion would not hold up—that is, the allowance left

there would be insufficient to permit of the black being removed, so that these allowances, greater and less in amount, have to be averaged all over the work, and it may happen that while perhaps $\frac{3}{16}$ in. or $\frac{1}{4}$ in. may have to be removed from one portion of the bore, only $\frac{1}{32}$ in. or $\frac{1}{16}$ in. may be left for removal from another. These differences often give much trouble to the liner-out, and several successive settings and trials sometimes have to be made before the casting or forging can be fully marked out, and sometimes work has to be thrown away because the allowances cannot be averaged without having the metal altogether too scanty in some portions.

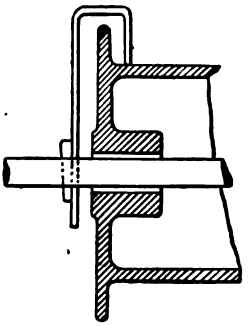

Fig. 324.

The centring of jobs for boring is done in various ways. The principal are these:—If a cylindrical piece of work has no flanges or brackets suitable for securing fastenings by, then it is laid in vee blocks, and held down with straps or with clips. The vee blocks may be set by means of lines scribed on the table. Work may be centred often by the boring circle that is scribed and centre popped on the ends. A pointed wire is attached to the driving chuck, or to the boring bar in such a position that by the revolution of the spindle the point will move round the scribed circle, the work being adjusted until the two coincide. In many jobs, however, the outside must form the guide for setting the bore concentric with, and then the boring circle need not be struck out. The point of the wire is run round the outside diameter, and the work adjusted to coincide, and then it is right for boring. Fig. 324 shows such a wire wedged in a boring bar for the setting of a crane drum. Another appliance used for the same purpose is shown in Fig. 325. In this the base is vee'd to move round shafts of various diameters. It is suited for use in a locality where there is no slot into which the wire can be dropped and wedged. A, A′, are

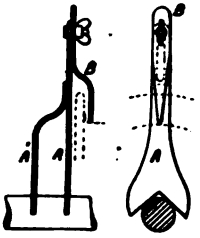

Fig. 325.

two pieces riveted together, A being provided with a slot at its upper end; B has a round hole for the thumb screw, which traverses the slot in A.

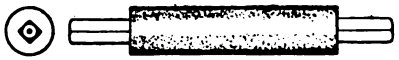

Fig. 326.

Drilled, and bored holes, especially when hardened, as in case-hardened work, are frequently finished with a lead lap, between centres. Such a lap is shown in Fig. 326, the lead being cast round a square bar, and charged with emery.

SECTION V.

SCREW CUTTING AND TURRET WORK.

CHAPTER XIV.

Screw Cutting.

The Relation of Traverse to Pitch—Methods Employed—Single and Multiple Edged Tools—Chasers, Dies, and Taps—Screw Cutting in the Common Lathe—The Change Wheels—First Principles—Relations of Lead Screw, Mandrel, and Change Wheels—Ratio Explained—Methods of Calculation—Obtaining Wheels from Fractions—Positions of the Wheels for Coarse and Fine Pitches—Compound Trains—The Swing Plate—Obtaining Wheels by Trial—Compound Proportion—Metric Pitches—The Relation between English Lead Screw and the Millimetre—Even Numbers and Prime Numbers—Obtaining Wheels for Prime Numbers—Various Ways of Stating Problems in Screw Cutting—Examples—The Threading Tool—Precautions necessary in Cutting Screws—The Termination of a Screw Thread—The Inclination of Screw Cutting Tools for Square Threads—Graphic Method of Obtaining—The Sectional Form of Square Threads—Form of Tool Necessary—Cutting Threads of Steep Pitch—Driving from the Lead Screw, Backwards—Lathe Heads of Special Form—Catching Threads—Dropping in the Clasp Nut—Fractional Threads—Multiple Threaded Screws—Hendey-Norton Change Gears—Rivett-Dock Disc Cutter—Machines used in the Formation of Short Screws—The Principal Forms summarised—The Work of the Chaser—Chasers compared with Dies—The Standard Screw Threads—The Whitworth—The Sellers—The Sharp Vee—The Sauvage, or French—The Delisle, or German—The Thury, or Swiss—The International—The British Association—The Acme—Decimal Equivalents.

IN the formation of any screw there are two elements concerned, one being longitudinal guidance, coercion, lead, or pitch; the other the sectional shape. Two movements are necessary to produce these results—the longitudinal or traverse, and the circular. These must synchronise perfectly in order to produce a true screw. The relations of the longitudinal and the

circular vary widely, as the pitch and diameter varies, but for any one screw they must be constant, and constant both for the screw and its nut. It is in the observance of these relations, simple though they may seem in the abstract, that the difficulties incidental to the formation of screws come in. The guidance and the cutting action must coincide exactly for perfect results, one not acting as a hindrance or check to the other, and the cutting tools must be so formed that there shall be no want of symmetry in the screw threads, and no lack of correspondence between the external and internal threads. The finer the threads the more is the difficulty increased. The longer the screws the greater also the difficulties of fitting, for any long screw will vary in pitch in different sections.

It appears that every method of screw cutting, ancient and modern, survives in modern practice. Screws are originated when a movement is imparted to the tool by a cam screwed upon a cylinder, and origination is the oldest device, and one which has been effected in many ways. Screws are copies of originals, as when former screws are used to give the pitch or lead to the copy; or as when taps, or dies, or chasers are employed to give both the lead and the sectional forms.

The methods employed in the formation of screws differ as length varies. In long screws the guidance of the cutting actions is effected by distinct arrangements, and in short screws the two actions are generally performed in combination by one mechanism or device. The distinction is not of a hard and fast character, since there are numerous exceptions, but it is correct in the main. Under the first division comes the case of the lead screw used as a guide to the cutting tool operating elsewhere. Under the second come the taps and various dies, and chasers held in cam plates.

The screw-cutting tools are formed either with a single edge or with numerous edges. The first can only be used when the guidance is effected quite independently of the tool, as in the screw-cutting lathe with lead screw, or in the Fox lathe, or in the cam-operated movement. Those tools with numerous edges are also actuated by the above-named methods, but they also become, when the edges are arranged in various ways round a circle, self-leading cutting tools, independent of extraneous control, save that afforded by the revolution of the screw blank. Under this head

come all the taps and dies, the chasing tools set radially in a box, hobs, and kindred devices.

The screws cut in capstan lathes, and screw machines are formed by taps, dies, and chasers. The broad difference between chasers, and dies or taps is that the former cut more freely than the latter. The latter, however, possess superior guidance. If we study the principles which underlie the construction of such tools, the result is seen to be a compromise between functions which are entirely opposed to each other—namely, guidance and cutting, squeezing and penetration. The distinction is well understood in a practical way, without giving an explanation of the fundamental facts.

In screw machines, as in the vast majority of turret work, the rather clumsy arrangement of guide screw and change wheels has no place. It is too tardy a process. Threads must for the most part be cut with tools which combine in themselves the guiding and the cutting actions, and the difficulty in such tools has always been how best to effect a workable compromise between the two sets of operations which are opposed to each other. In practice, therefore, we find that a wide range of tools has been employed, in which one or the other action has predominated to the detriment of the other. The issue is that shop practice is governed by the practical conditions which are the outcome of countless experiments involving trial and error.

In screw cutting in the common lathe, the proportions which exist between the pitch of the guide screw and that of the screw to be cut, lie at the basis of calculating, and gearing up change wheels. The problem is that in which a screw shaft, the pitch of which cannot be altered, has to be made the means of cutting every thread that can ever possibly be wanted, on hundreds of other shafts, or pieces. The toothed wheels, which are changed at the back of the headstock as often as different pitches are required, are arranged either in simple or compound trains. Pitches are thus cut coarser or finer or equal to that of the lead screw, and single, or double, or multiple threaded also. So can threads of different hand, by reversing the movement of the slide rest. Neither reversal, nor the diameters of the lead screw and the screw to be cut, nor the sections of the threads, affect the arrangements of gears, though the shapes of tools are often modified considerably thereby.

The following change wheels are those which are usually supplied with an engineer's lathe:—20, 25, 30, 35, 40, 45, 50, 55, 60, 65, 70, 75, 80, 85, 90, 95, 100, 105, 110, 115, 120. With these there are some duplicates, either 20, 40, 60, 80, 100, or all of them. These duplicates are used for cutting screws having the same pitch as the lead screw, and for reversals.

Though these wheels, from 22 to 26 in number, cut all the screws that are in common use, they do not cover all the requirements of a shop. The gas threads require wheels of prime numbers for 11 and 19; but 14 and 28 are not primes, and therefore special wheels are not essential for cutting these. Prime numbers must be put into a set of wheels before they can be reproduced on the thread; but any ordinary threads can be cut with composite numbers of teeth — that is, multiples of the relations between lead screw and screw to be cut. The latter is, of course, a case of convenience, and does not disturb the problem of ratio, which can be settled independently of numbers of teeth in gears. The ratio of six to twelve, for example, is met by taking 60 and 120, or 30 and 60, and many other possible combinations besides.

Screw cutting often seems difficult because the subject is not approached from the point of view of first principles, thus:—The lead screw is the primal element; the lathe mandrel is the secondary one; and the change wheels form the variable element of connection. Taking the lead screw and the lathe mandrel, it is clear that if you should put equal-sized pulleys on the end of each, and drive by a belt from mandrel to screw, and during their rotation feed along a tool in the slide rest through the medium of a nut on the lead screw, then a thread would be cut of the same pitch or rate as that on the lead screw. Substitute equal-toothed wheels for the pulleys and belt, thus eliminating possible slip, and the same result is obtained.

Go a step further, and consider the change wheels as simply a convenient device for changing the ratio between the speed of rotation of the lead screw and of the spindle, so *accelerating* or *retarding* the rate of traverse of the slide rest relatively to the revolutions of the spindle and the work which it drives, and the problem is at once clear.

Ratio in screw cutting is therefore only the proportion which exists between the pitches of two screws, obtained by dividing one

by the other. Thus, with a guide screw of four threads per inch, to cut a screw of ten threads per inch the ratio is

$$4 \div 10 = 0.4,$$

and the change wheels must have the same relation, as, say 100 and 40, and proving:—

$$40 \div 100 = 0.4.$$

Putting it in a graphic way:—A lead screw of two threads per inch—Fig. 327, A—moves the tool ½ in. at each revolution, and if equal change wheels were interposed, the thread cut B, would be of ½-in. pitch, and we should have equal ratios. If four threads per inch were required, the ratio would be as 4 to 2, C. If eight threads per inch, the relation would be as 8 to 2. If one thread per inch, the ratio would be as 1 to 2. Double threads, as at D, are of twice the pitch of B, or as 1 to 2, one thread being interpolated between another, the two being indicated by *a a*, *b b*.

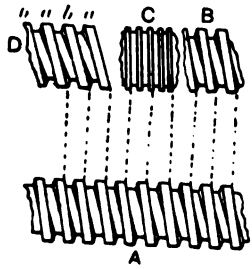

Fig. 327.

From this starting point of ratio the change wheels can be obtained either by calculation based on the ratios or by the method of adding cyphers.

For instance, the ratio of 8 to 2, which is the same as 4 to 1, can be got by fixing on one wheel, and deducing another, thus:—

$$80 \text{ teeth} \div 4 = 20 \text{ teeth, or}$$
$$100 \text{ teeth} \div 4 = 25 \text{ teeth.}$$

The highest ratio obtainable in a single train in ordinary sets is:—

$$120 \div 20 = 6,$$

and these wheels, with a lead screw of ½-in. pitch, would cut a pitch of one-sixth of ½ = 12 to the inch; or, reversing the wheels, supposing the big wheel could be got on the spindle end, six times ½-in. pitch, or a 3-in. pitch. Beyond this ratio compounding becomes necessary.

The other method, that of adding cyphers, can be stated simply thus:—

Place the number of threads in the lead screw for a numerator, and the number of threads in the screw to be cut for a denominator, and add a cypher to each to obtain the numbers of teeth in the change wheels.

The pitches of guide screws are denoted by a single figure. Thus, a screw having four threads per inch, or $\frac{1}{4}$-in. pitch, is of 4 pitch; one of two threads, or $\frac{1}{2}$-in. pitch, is 2 pitch. If a thread of $\frac{1}{2}$-in. pitch has to be cut on a lathe with a lead screw of $\frac{1}{4}$-in. pitch, the ratio or relation stands thus:—

$$\frac{4}{2}.$$

From this fraction the wheels $\frac{40}{20}$ are obtained, or $\frac{80}{40}$, or $\frac{60}{30}$, &c., either pair of which will cut the screw of $\frac{1}{2}$-in. pitch, provided the larger wheel is used as driver, and the smaller as the driven, so accelerating the traverse of the slide rest.

In obtaining the wheels from the fraction $\frac{4}{2}$ it will be observed that the relation or ratio of the numerator and the denominator has not been disturbed. In the first case we multiplied $\frac{4}{2}$ by ten, making $\frac{40}{20}$. Then we doubled this, making $\frac{80}{40}$; then we increased $\frac{40}{20}$ by half, making $\frac{60}{30}$. Or we could have multiplied by 5, which it is often convenient to do:—

$$\frac{4}{2} \times 5 = \frac{20}{10},$$

only in this instance it would not answer, because 10-tooth wheels are not in a set.

Beyond the question of ratios or numbers of teeth, the positions which the wheels have to occupy must be understood.

If a thread has to be cut of coarser pitch than that of the guide screw, then, wheels being selected having the required relation, say, of two to one, the larger wheel must be put on the spindle, and the smaller on the guide screw. This has the effect of rotating the latter twice while the spindle turns once, and so draws the slide rest along a distance of two lead screw pitches, while the tool in the rest cuts one thread. If, however, the screw to be cut is finer than that on the lead screw, then even though the same

wheels should be used, their positions will be reversed, and the slide rest will be traversed one lead screw pitch, while two threads are being cut on the work. We therefore deduce the following fundamental rule:—

The pitch of the lead screw is to the pitch of the screw to be cut as the number of teeth on the spindle wheel is to the number of teeth on the lead screw wheel.

Or, putting it in another way, for threads finer than that of the guide screw, the spindle must rotate *faster* than the guide screw; but for threads coarser than that of the guide screw, the spindle must rotate at a *slower* speed. In the first case the traverse of the slide rest is *retarded;* in the second it is *accelerated* in relation to the spindle.

When pitches become very fine or very coarse, the simple train gives place to the compound.

Say a screw has to be cut with sixteen threads to the inch on a lathe with a screw of $\frac{1}{4}$-in. pitch, then

$$\frac{16}{4} = \frac{160 \text{ driven}}{40 \text{ driver}},$$

showing that a wheel of 160 teeth is required for the guide screw, and one of 40 for the spindle. But 160 lies outside the limits of sets of change wheels. The numbers, however, can be divided, and the ratio maintained thus:—

$$\frac{160}{40} \div 2 = \frac{80 \text{ driven}}{20 \text{ driver}},$$

and so the difficulty can be got over. But soon with still finer pitches this device will fail. Take a thread of 32 pitch; then

$$\frac{32}{4} = \frac{320}{40};$$

and if we halve the result, the numerator is still too large, while the denominator is the smallest wheel available. It is necessary, therefore, to find among the wheels those the products of which, when divided, will give the relation $\frac{32}{4}$, thus:—

$$8 \times 4 = 32$$
$$2 \times 2 = 4.$$

Then adding cyphers,

$$\frac{80 \times 40}{20 \times 20}$$

will cut the thread, the smaller wheels being the drivers, and the larger the driven.

Supposing it should be undesirable to use the wheels just as they stand, in consequence, say, of not having two 20-toothed wheels, or in some cases due to difficulties in gearing up: one driver and one driven can be altered in equal proportions, and the relations will remain unchanged. Thus, increasing two wheels by one-third :—

$$\frac{80 \times 60}{20 \times 30}, \text{ or } \frac{120 \times 40}{30 \times 20},$$

or, two by one-fourth :—

$$\frac{80 \times 50}{20 \times 25}, \text{ or } \frac{100 \times 40}{25 \times 20}$$

—any of which combinations would cut thirty-two threads.

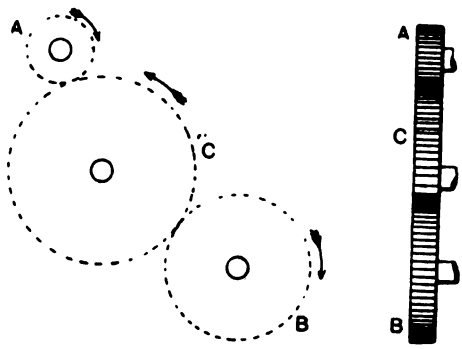

Fig. 328.

In fixing up the wheels, one driver goes on the spindle, and one on the stud of the swing plate. This same stud receives one of the driven, while the other driven goes on the lead screw. Either one of the drivers, or either one of the driven, may go on the stud without affecting results, convenience alone being studied in these arrangements.

Fig 328 shows a simple train for cutting a thread finer than that on the lead screw: A spindle wheel, B lead screw ditto, C intermediate which connects A and B, but does not alter their ratio. It is selected of any size most convenient for gearing up, and

causes the lead screw to rotate in the same direction as the spindle, so feeding up towards the headstock.

Fig. 329 is a compound train, also for a thread finer than that

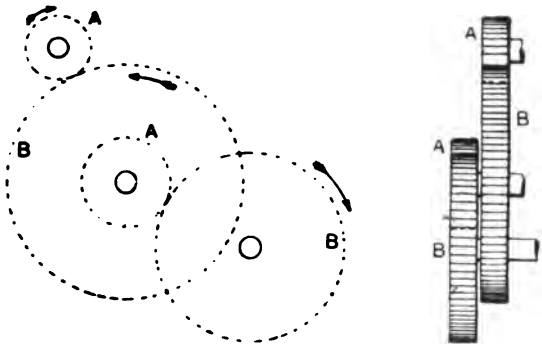

Fig. 329.

on the lead screw, A, A being drivers, B, B driven. In Fig. 330 the conditions are reversed for cutting a coarser thread than that on the lead screw. Fig. 331 shows the swing plate at A, which pivots around the lead screw at B. The plate carries the stud or studs for the intermediate gears in its slots. In a simple train the latter is simply an idle wheel, or wheels to connect the driver on the spindle, and the driven on the lead screw, causing the latter to rotate either in the same direction or in the opposite direction from the spindle, for right or left-hand threads. In a compound train, one or more sets of drivers and driven are carried on studs in the slots of the plate. Besides the movement of the studs in the slots there is the turning movement of the quadrant on its pin at the end of the lead screw, by means of which the studs in the slots can be thrown out of line with the centres of lead screw and spindle. These adjustments permit of wide variations in the numbers of gears that can be brought into engagement between

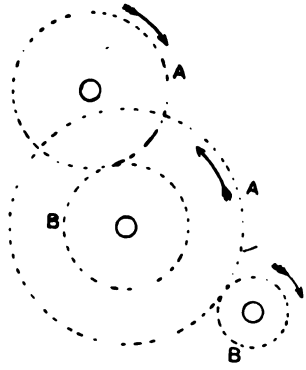

Fig. 330.

the fixed centres of the spindle and the lead screw. But it nevertheless happens that gears will be calculated that cannot be brought in, even with this accommodation, and then others must be reckoned out.

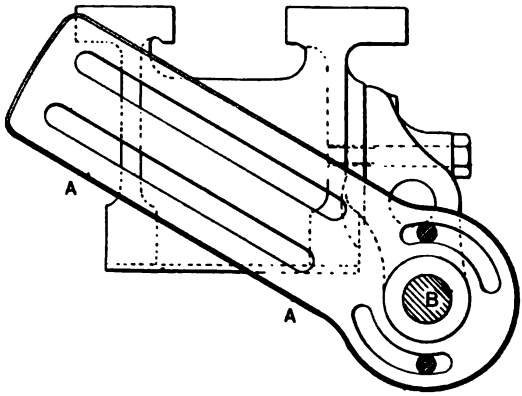

Fig. 331.

When connecting up change gears on the swing plate, the lathe must not be started until the wheels have been tried with the hand, to be sure that the teeth are not jammed and bottoming too tightly. If they are, they will strip off on starting the lathe.

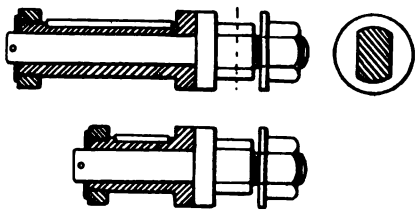

Fig. 332.

A very slight amount of backlash must be allowed, which is of no consequence when the wheels run in one direction.

The studs (Fig. 332) are made, one for a single train to take the intermediate wheels, the other double as long to take two wheels side by side for a compound train. They have flats to

slide in the slots in the swing plate without turning, in which they are bolted fast after adjustments have been effected.

We have been considering methods of obtaining change wheels regardless of the inconvenience of having to shift the spindle wheel frequently. This is sometimes undesirable, especially, when, as in some old lathes, the back bridge has to be removed each time of changing. In order, therefore, to leave the spindle wheel untouched, the following rule can be taken:—

Multiply the number of teeth on the spindle wheel by the number of threads to be cut. Divide the product by the number of threads per inch on the guide screw. The result will be the number of teeth required in the wheel on the guide screw.

Suppose the spindle wheel has 20 teeth, and the lead screw 4 threads per inch, and that a screw of 10 threads per inch has to be cut; then

$$\frac{20 \times 10}{4} = \frac{200}{4} = 50.$$

A 50-toothed wheel will be wanted on the guide screw.

The case of fractional pitches is really included in the foregoing rules, since these are set down in the manner of a whole pitch. For example, to cut $12\frac{1}{2}$ threads per inch, with a lead screw of $\frac{1}{4}$-inch pitch, multiply by the denominator of the fraction, thus:—

$$\frac{12\frac{1}{2}}{4} \times 2 = \frac{25}{8},$$

giving a ratio of 25 to 8, which can be obtained by wheels, thus:—

$$\frac{25}{8} \times 5 = \frac{125}{40},$$

125 being a special wheel outside the usual range, 40 wheel the driver, and 125 the driven. But ordinary wheels can be got thus, say:—

$$\frac{25}{8} \times 10 = \frac{250}{80}.$$

Then breaking up, $\frac{5 \times 50}{10 \times 8}$, increasing two factors by ten, $\frac{50 \times 50}{10 \times 80}$, and then multiplying two factors by two $\frac{50 \times 100}{20 \times 80}$, 20 and 80 drivers, and 50 and 100 driven, will cut the thread of $12\frac{1}{2}$ to the inch.

Take a pitch of $12\frac{3}{4}$ to the inch:—

$$\frac{12\frac{3}{4}}{4} \times 4 = \frac{51}{16}.$$

We must break up into a compound train, say:—

$$\frac{51}{16} = \frac{3 \times 17}{2 \times 8} = \frac{30 \times 170}{20 \times 80}.$$

As 170 is a wheel not in the set, we must substitute two other wheels by cancelling, thus:—

$$\frac{30 \times 85}{20 \times 40}.$$

The ratio between these will be the same as that which exists between $12\frac{3}{4}$ and 4 threads per inch; and 20 and 40 will be the drivers, and 30 and 85 the driven.

Decimals may be used instead of vulgar fractions, as

$$\frac{12.75}{4},$$

and wheels be deduced thus:—

$$\frac{12.75}{4} \times 4 = \frac{51.00}{16},$$

and so on. Sometimes decimals, as in half threads, lend themselves to the getting of numbers at once, thus:—

$$10\tfrac{1}{2} \text{ threads per inch} = \frac{10.5}{4} = \frac{105}{40} \text{ teeth.}$$

Or,

$$\frac{6.5}{4} = \frac{65}{40} \text{ teeth.}$$

It is well to know how to test the accuracy of calculations, especially when they become intricate, before taking a cut, though a line can generally be run round a job and measured.

The test is based on the principle that the same ratio or proportion exists between the driving and the driven wheels, and that of the lead screw and the screw to be cut. Hence the rule:—

In a compound train: Multiply the driving and the driven wheels together, and divide the product of the driven by the product of the drivers. Then multiply the quotient by the number of threads per inch on the guide screw. The result is the number of threads to be cut. In a simple train the number

of teeth in the single driven wheel is divided by that in the single driver. Taking the simple train first given for cutting a screw of $\frac{1}{2}$-in. pitch with a $\frac{1}{4}$-in. pitch lead screw, with wheels:—

$$\frac{40 \text{ driver}}{20 \text{ driven}}.$$

$40 \div 20 = 0.5 \times 4 = 2.0$ threads per inch to be cut.

Taking the compound train for 32 threads per inch to be cut with wheels:—

$$\text{Driven } \underline{80 \times 60} = \underline{4800},$$
$$\text{Drivers } 20 \times 30 = 600,$$

$4800 \div 600 = 8 \times 4 = 32$ threads per inch to be cut.

Or, $12\frac{1}{2}$ threads and $\frac{1}{4}$-in. pitch of lead screw:—

$$\underline{50 \times 100} \text{ driven} = \underline{5000},$$
$$20 \times 80 \text{ drivers} = 1600,$$
$$5000 \div 1600 = 3.125 \times 4 = 12.500.$$

Next take $12\frac{3}{4}$ threads to the inch, guide screw of 4 pitch:—

$$\underline{30 \times 85} \text{ driven} = \underline{2550},$$
$$20 \times 40 \text{ drivers} = 800,$$
$$2550 \div 800 = 3.1875 \times 4 = 12.75.$$

Another way of calculating change gears is by the rule of three. This follows from the fact that the relation or ratio between the pitch of the lead screw and that of the screw to be cut is the same as that which exists between the wheel on the lathe mandrel and that of the lead screw.

In this case a wheel is selected at random for the spindle, the general rule for its choice being that a small wheel will be more convenient if a fine thread has to be cut, and a large one if a coarse thread. This is to permit of gearing up to the best advantage.

Say a pitch of 8 to the inch is required on a lathe with a 4-pitch guide screw. Put a 40-toothed wheel on the spindle. Then the sum stands thus:—

$$4 : 8 :: 40 : \text{wheel required.}$$

Then $\frac{8 \times 40}{4} = 80$, showing that an 80-toothed wheel is required on the guide screw.

Take 3 threads per inch, and put 40 on the spindle. Then—

$$4 : 3 :: 40 : \text{wheel required.}$$

$$\frac{3 \times 40}{4} = 30 \text{ teeth.}$$

A wheel of 30 teeth will therefore go on the guide screw.

If a 60 wheel were put on the spindle, then

$$4 : 3 :: 60 : 45 \text{ on guide screw.}$$

Requiring a screw of 16 threads per inch, and wheel 40 on the spindle, 4 : 16 :: 40 : 160, which is much too large. Either a smaller wheel must go on the spindle or a compound train be used. If 20, 25, or 30 wheel be put on the spindle, either will give gears to cut the 16-rate thread, thus:

$$4 : 16 :: 20 : 80$$
$$4 : 16 :: 25 : 100$$
$$4 : 16 :: 30 : 120$$

It will frequently happen that wheels in compound trains have to be obtained by a process of trial and error. Taking, say, a screw of 20 threads, we select two drivers and one driven at random, and then find the other driven, remembering that the products of each give the proportions required.

As the thread to be cut is much finer than the lead screw thread, we select two small gears for drivers, say 20 and 30, and a large gear for a driven, say 75. Then by compound proportion:—

$$\underset{\text{guide screw}}{4} : \underset{\text{screw to be cut}}{20} :: \underbrace{20 \times 30}_{\text{drivers}} : \underset{\text{driven}}{75} \times \text{second driven required.}$$

$$\frac{20 \times 30 \times 20}{75 \times 4} = 40 \text{ second driven gear.}$$

20 or 30 will go on the spindle, and 75 or 40 on the guide screw, and one driver and one driven on the stud, the choice often depending on how the wheels gear up best for centres. If they do not come in right, the calculation will have to be gone over again, selecting wheels with more suitable numbers of teeth.

The proof is:—

$$\frac{\text{Driven } 75 \times 40}{\text{Drivers } 20 \times 30} = 5 \times \underset{\text{guide screw}}{4} = 20 \text{ threads to be cut.}$$

The case of metric pitches is one that arises more frequently now than formerly. A good many lathes are now made with metric lead screws, which simplifies matters at once. But generally if metric threads have to be cut in the smaller English shops, they must be done on lathes with English lead screws. Two courses are open, either to get a wheel of 63 teeth or one of 127 teeth, the latter reducing error due to conversion of pitch to $\frac{1}{1000}$ inch on the length of the metre, while one of 63 teeth leaves an error of about $\frac{1}{240}$ inch on that length.

To understand these relations it is necessary to remember a statement previously made that "the same ratio or proportion must exist between the driving and the driven wheels, and that of the lead screw and the screw to be cut." Or, putting it in another way, the ratio between the driving and the driven wheels must be the same as that between the complete number of threads in a given length of the screw to be cut and the same length of the lead screw.

The metre measures 39.37079 in., and a millimetre is the thousandth part of this length, say $39\frac{3}{8}$ in. In a metre length of lead screw with 4 threads per inch, there will be:—

$$39\tfrac{3}{8} \times 4 = 157\tfrac{1}{2} \text{ threads of } \tfrac{1}{4}\text{-in. pitch.}$$

The ratio between these and the millimetre threads in the same length is:—

$$\frac{157.5}{1000}.$$

Dividing these factors by 2.5 to reduce to lower equal numbers, gives:—

$$\frac{157.5}{1000} \div 2.5 = \frac{63}{400};$$

$\frac{63}{400}$, therefore, is a constant ratio applicable to lathes which have lead screws of $\frac{1}{4}$-in. pitch. 63 has now to be multiplied by the pitch to be cut, in millimetres, thus:—

Say a thread of 10 mm. is required, the calculations stand thus:—

$$\frac{63 \times 10}{400} = \frac{630}{400},$$

and $\frac{630}{400}$ are the relations of the change wheels required.

Breaking the factors up, we may obtain by cancelling—

$$\frac{630}{400} = \frac{63 \times 30}{20 \times 60}$$

As 10 mm. (0.3937 in.), the screw to be cut, is a coarser pitch than $\frac{1}{4}$ in., the pitch of the lead screw, the larger wheels, 63 and 30, will be the drivers, and the smaller, 20 and 60, the driven.

The proof is :—

$$\frac{20 \times 60 \text{ driven}}{63 \times 30 \text{ drivers}} = \frac{1200}{1890} = 0.63492.$$

And since $\frac{63}{400}$ represents the relation between the pitch of the English lead screw of $\frac{1}{4}$-in. pitch and the millimetre, we can divide thus: $400 \div 63 = 6.3492$, and 6.3492 is a constant ratio for a pitch of 1 mm. And 0.63492×10 mm. $= 6.3492$.

The ratio $\frac{63}{400}$ is only correct for lead screws of $\frac{1}{4}$-in. pitch. For a lathe having a $\frac{1}{2}$-in. screw the ratio is $\frac{63}{800}$.

There are two classes of numbers: those which can be divided without a remainder—the even numbers,—and those which cannot be divided without a remainder. As the former are by far the more important in screw cutting, they are almost invariably embodied in the lead screw, the exceptions being one and two, which, though primes, are units that are capable of multiplication and fractioning, sometimes termed "square primes." The prime numbers up to 97 are 1, 2, 3, 5, 7, 11, 13, 17, 19, 23, 29, 31, 37, 41, 43, 47, 53, 59, 61, 67, 71, 73, 79, 83, 89, 97. None of these numbers except one is capable of expression in terms common to each other. That is, you cannot divide and subdivide, say, five, to bear equal relations to divisions of three, seven, nine, eleven, and so on. But four, however often it is equally subdivided, will have its minutest fractions exactly related to eight, twelve, sixteen, twenty, and so on.

As, therefore, prime numbers will not admit of aliquot subdivisions among themselves, while the other numbers do, the reason for having lead screws of four threads, or two threads to the inch, is evident. Three threads to the inch are embodied in some lathes, but the prime three must be neutralised by a wheel based on that prime for all threads excepting those which

are multiples of three. Two, five, and seven are primes, and are therefore not divisible by three exactly. There must be fractional parts in the division of one prime by another, and this is where the greatest difficulties, real or apparent, come in when calculating change wheels.

To cut prime numbers, say 13, 17, and 19 threads per inch, with a lead screw of two per inch, the fractions stand:—

$$\frac{2}{13}, \frac{2}{17}, \frac{2}{19} \begin{array}{l}\text{mandrel}\\ \text{screw.}\end{array}$$

If we try multiplying by 10, the wheels are not in an ordinary set:—

$$\frac{20}{130}, \frac{20}{170}, \frac{20}{190};$$

so that compound trains must be looked up.

Beginning with $\frac{2}{13} \times 5 = \frac{10}{65}$, equivalent to:—

$$\frac{2 \times 5}{10 \times 6.5} \times 10 = \frac{20 \times 50 \text{ drivers}}{100 \times 65 \text{ driven}}.$$

Taking $\frac{2}{17} = \frac{2 \times 1}{17 \times 1} = \frac{20 \times 100}{170 \times 100}$, substituting

$$\frac{20 \times 50 \text{ drivers}}{85 \times 100 \text{ driven}}.$$

Taking $\frac{2}{19} = \frac{2 \times 1}{19 \times 1} = \frac{20}{190} \times \frac{100}{100}$, substituting

$$\frac{20 \times 50 \text{ drivers}}{95 \times 100 \text{ driven}}.$$

In preceding paragraphs ratio has been considered as relation between the number of threads to be cut and the number of threads in the lead screw referred to 1 in. in length. But sometimes, in fractional pitches, it refers to a greater length, in which a complete number of turns of each is accomplished.

Thus, to cut 18 threads in a length of $22\frac{1}{4}$ in. with a lathe having a lead screw of $\frac{1}{4}$-in. pitch, the case may be put thus: In a length of $22\frac{1}{4}$ in. there are $22\frac{1}{4} \times 4 = 89$ threads, and in that length we want to cut 18 threads, hence $\frac{89}{18}$ is the relation between the two. As the thread to be cut is coarser than that on the

lead screw, the larger gears will drive, and the fraction $\frac{\text{threads in lead screw}}{\text{threads to be cut}} = \frac{89}{18} = \frac{\text{drivers}}{\text{driven}}$ is rightly placed. 89 and 18 toothed wheels would suit, but 89 is a prime, and 18 not in a set. Neither is a multiple or aliquot part of 89 available in a set. But we can get something very close. The relation of $\frac{89}{18}$ is 4.944 = the ratios of the screws and of the driver and driven gears. Make the figures 90 and 18. Then $\frac{90}{18} = 5$. This discrepancy may then be reduced by lessening the factors by one-eighteenth, making $\frac{90}{18} = \frac{84}{17}$, the ratio of which is 4.941, very near the mark. Wheels can now be deduced thus:—

$$\frac{84}{17} = \frac{7 \times 12}{17 \times 1} = \frac{70 \times 120}{170 \times 10}.$$

Halving 170 and doubling $10 = \frac{70 \times 120 \text{ drivers}}{85 \times 20 \text{ driven}}$.

There are also unusual methods of putting simple problems. Thus, to cut a screw that will traverse a nut the twentieth part of 3 in. at the fifth of a revolution.

Clearly in one revolution the traverse is five-twentieths of 3 in. —that is, one-fourth of 3 in.—so that the pitch required is $\frac{3}{4}$ in. Supposing a lead screw of two threads per inch, then $\frac{3}{4}$ in. being coarser than $\frac{1}{2}$ in., the relation may stand thus: $\frac{6}{4}$—that is, there are six threads of lead screw in 3 in., against four threads of $\frac{3}{4}$ in. in the same distance, and the larger wheels must drive.

And $\frac{60}{40}$ or $\frac{30}{20}$ or $\frac{120 \text{ driver}}{80 \text{ driven}}$ will cut the thread.

Again, to cut a thread that will traverse a nut the twentieth part of 3 in. at the fourth of a revolution. In one revolution the traverse will be four-twentieths, or one-fifth of 3 in. = five threads in 3 in., and the ratio stands $\frac{6}{5}$ representing the number of threads in 3 in. in lead screw and screw to be cut.

Therefore, $\frac{60}{50}$ or $\frac{30}{25}$ or $\frac{120}{100}$ will cut the thread.

A different way of putting screw-cutting problems is this:—To cut, say, $5\frac{1}{4}$ threads per inch with a lead screw of two per inch, the change wheels must be as 2 to $5\frac{1}{4}$ or $\frac{2 \text{ driver}}{5\frac{1}{4} \text{ driven}}$, or $\frac{8}{21}$.

Multiply by numbers in succession until numbers corresponding with change wheels are obtained. Thus:—

$$\frac{8}{21} \times 2 = \frac{16}{42}.$$

$$\frac{8}{21} \times 3 = \frac{24}{63}.$$

$$\frac{8}{21} \times 4 = \frac{32}{84}.$$

$$\frac{8}{21} \times 5 = \frac{40}{105}.$$

The first three are useless, but the fourth trial gives us numbers available.

The calculation and the setting up of change wheels are only the beginning of the work of screw-cutting. The threads have to be cut truly and smooth, so that there shall be neither tight nor easy fitting of the screw in any part of its length. As all vee Whitworth threads have to be chased, it is better in turning to leave them a shade full rather than bare.

The threading tool is ground to an angle of 55°, tested in a screw gauge, and then backed off slightly for clearance. It is set to the work by a screw gauge, one edge of the gauge lying against the edge of the work, while the point of the tool is brought up into the vee, and clamped thus. Its height must coincide exactly with the lathe centre.

Before commencing to cut, it will be well to set the point of the tool up to just touch the surface of the work, and set the micrometer index on the boss of the transverse screw to zero. Run back the tool clear from the end of the work, and then set it for a light cut; put in the clasp nut, and take a cut. Several cuts are then taken until the depth of the thread is nearly reached, after which the chaser is brought into service, both to finish the sides of the threads and to round the tops. Hand or slide-rest chasers are used.

A matter which is forcibly impressed upon a turner who is not careful is the termination of a screw thread. A good plan

is to drill a hole there for the tool to finish in; but it is necessary to slow the lathe down as the end is being reached and to have the traverse handle of the rest ready for instant running back. A quick withdrawal device greatly facilitates this work. It is better also to pull the lathe by hand for the last thread or two of the cut until skill is attained in this kind of job. Soapy water is used freely for lubricating wrought iron and mild steel. Oil may be employed alternatively, as it is better for the harder kinds of steel.

Screw-cutting tools have their cutting angles of 55° or 60°, or otherwise, formed in the plane of the longitudinal axis of the cylinder. As the angle, and form of the threads varies with their inclination, which depends on diameter, clearance in thread-cutting tools is given sufficient in amount

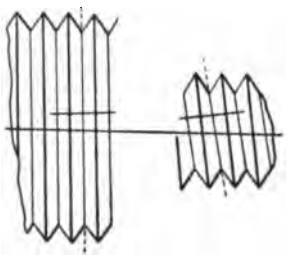

Fig. 333.

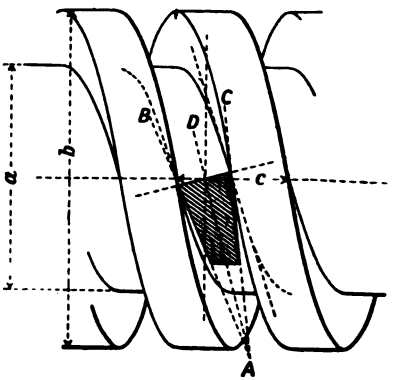

Fig. 334.

to suit all single threaded screws. The diagram (Fig. 333) illustrates the fact that clearance varies with the inclination of the thread.

No trouble arises with the inclination of screw-cutting tools for vee threads, but difficulties occur in cutting square threads of quick pitch (Fig. 334) due to the change of angle from tip to root. Hence it is well to mark out the angle of the thread, both at root, and point, and grind the clearance on the tool by the aid of the diagram.

The diameter of the screw at the top and bottom is shown marked out (Fig. 335), *a*, *b*, representing the circumferences respectively of the diameters *a*, and *b* in Fig. 334, but on a

smaller scale. The base lengths *c*, *c*, are equal to the pitch, and therefore alike. The diagonals or hypotenuses *d*, *e*, show the angle of the screw thread at the top and bottom of the thread. The differences in these angles are the reason why the side clearance of threading tools changes in relation to the thread being cut. If made right at the start, they will be wrong at the finish. And the steeper the pitch, or lead of the screw, or worm, the more marked is the difference. On one side the clearance angle will increase, on the other it will diminish. The tool must be ground right on one side for the start, and right on the other for the bottom of the cut. The tool will therefore be ground as sectioned in Fig. 334, A-B representing the angle of the leading edge, corresponding with that at the bottom of the thread, with clearance; A-C, that at the top, also with clearance, and the difference between these angles and those of the diagonals *d*, *e* (Fig. 335), is the slight amount of clearance which is necessary over and above that due to the angle of the thread. The clearances are equal in amount. The top of the tool is ground at a right angle with the line A-D which bisects the two sides of the tool. In cutting internal threads the opposite conditions will exist in regard to angles.

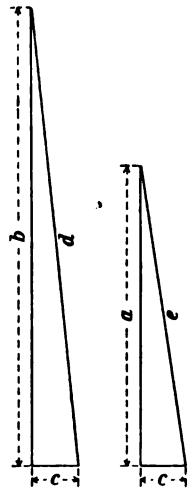

Fig. 335.

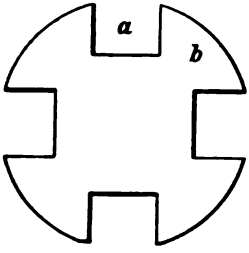

Fig. 336.

Square-threaded screws of quick pitch are always thicker at the top of the thread than they are at the bottom. A nut therefore cannot be made to fit them all the way down if divided and clamped from the outside, which explains why the lead screws of lathes are not strictly square in section, but either have their sides sloped slightly, or their tops and bottoms rounded, or both.

The explanation of the difference between the thickness of the thread at top and bottom is this, that the steep pitch screw affords an approximation to a groove cut parallel with the axis of

the screw. In the latter extreme case the sections would be as shown in Fig. 336, *a* corresponding with the spaces cut, and *b* with the screw threads left. The result is a misfit of the thread in its nut, as in Fig. 337. The steeper the pitch, as, say, in treble-threaded coarse pitched screws, the more marked is the difference, while in fine pitches and single threads, the difference is hardly perceptible. This also explains why it is so difficult to fit solid nuts as easily as divided ones to such screws, and why it is the practice in many jobs, as valves, and cocks, to cast brass nuts around their screws.

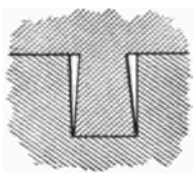

Fig. 337.

The tool for cutting the square thread in a nut must be wider at the point than behind, if nut and screw are to fit all down the sides of the thread, and its sides must be ground convex. The thread space is cut to the full depth and parallel, and another cut is then taken to widen it, and give the slope to the sides.

To obtain the exact shape of the tool, a bar can be taken of the same diameter as that of the screw, a hole drilled through it at right angles, and a metal plug inserted. Cut a short length of screw on the bar, similar to the one required, including the plug section. Then on knocking out the latter, the shape of the tool can be seen.

A problem which arises more frequently now than formerly is that of cutting threads of steep pitch, or lead, for multiple-threaded worms, as well as for ordinary coarse threaded multiple screws used for effecting rapid endlong movements. The worms are required chiefly by the demands for reduction gears for electric cranes. What has often happened in the attempt to cut these is that the teeth of the change wheels have been stripped off by the great strain put upon them, in consequence of the rapid and severe pull on the rest. The remedy is, instead of driving from the spindle through the change gears to the lead screw, to drive backwards from the lead screw through the change gears to the spindle. The spindle speed is then much slower than in the ordinary drive. When the common lathe is utilised thus, all that is necessary is to put a plain pulley on the end of the lead screw, and drive it from the main shaft, or from a countershaft, removing

the belt from the lathe cones. The drive must be powerful enough to pull the lathe carriage along at a very slow speed.

But several lathe heads now include special devices for the cutting of steep screws. One of these is shown in Fig. 338, devised by Messrs Tangye, in which it is not necessary to gear up heavily to cut screws of quick pitch, but the drive takes place with the back gears in, driving the first wheels at the same speed as the cone pulley, instead of at the spindle speed. In other words the driving is from the cones to the guide screw instead of from the spindle directly to the screw. The back gear gives power for turning, and the change wheels effect the traverse. Driving

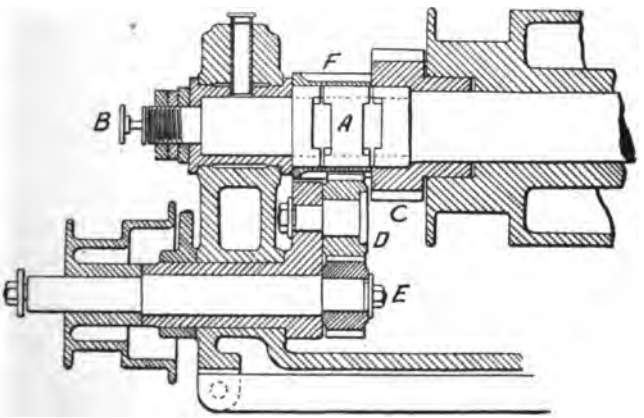

Fig. 338.

from the cones direct, speed is obtained for rapid traverse at once, without heavy gearing up from very small to very large wheels, or equivalent compound trains.

In the Tangye head (Fig. 338) the clutch A is used to throw in the spindle, or the cone drive, to the left for the first named, to the right for the second, effected by the knob B. The result of moving the clutch to the right is the same as though the first pinion for screw cutting were brought into gear with the cone pinion C. This effect is obtained more conveniently by the clutch A sliding in, and turning with the pinion F, which pinion becomes the first motion to the intermediate reversing pinion D, and pinion E beginning the train of gears. The pinion C, the first in the back

gear, and its enclosed clutch is fast with the cone pulley, receiving its motion therefrom. One of the Bradford lathes has provision for cutting screws of coarse pitch. It will cut screws of one thread in 4 inches, or coarser by using the back gear to drive the spindle, while the large cone gear drives the screw through a train of change wheels. As the back gear has a ratio of 10 to 1, if the spindle makes one revolution the screw makes ten, causing the carriage to travel ten times faster than in the ordinary way. In one of the Lang heavy treble-geared lathes, in which the driving cones are on a spindle, separate from the main one, the change from spindle drive to cone drive is effected by gearing an intermediate wheel on the swing plate either with a pinion on the end of the main spindle, or with one on the end of the cone spindle.

One of the difficulties of the screw cutter is that of catching the threads in certain cases. If a thread can be cut completely and perfectly at one traverse, this difficulty does not come in. But as most threads require two, or more traverses, the tool has to be set in exactly, so that it shall start right, and traverse precisely the same path in each traverse. Some lathes are fitted with an index device to ensure this, but these are rather exceptional. Another device is the backing belt, which is fitted to comparatively few lathes.

If a thread being cut is of the same pitch as, or an aliquot part of the pitch of the lead screw, the clasp nut can be dropped into engagement at any part of the traverse. But in other cases it will not do so. The way to test whether this is the case or not, is to divide the pitch of the thread to be cut by the pitch of the lead screw, when if there is no remainder, the clasp nut will engage anywhere. Thus threads of 2, 4, 8, 12 to the inch give no trouble with a lead screw of $\frac{1}{4}$ or $\frac{1}{2}$-inch pitch:—$2 \div 4 = .5$; $4 \div 4 = 1$; $12 \div 4 = 3$. In any problem of this kind, however stated, the essential is that the carriage when run back must pass over a whole number of threads both on the screw being cut, and on the lead screw. In other words, find the least common multiple for these distances, which will be the least distance the carriage can travel, plus a little extra length, say an inch, for making a start.

The object of ascertaining the correct locations for dropping in the clasp nut for starting a deeper cut, is to save the slow backward revolution of the mechanism by pulling at the belt by the hand, which would keep the tool in its cut, but be a fearful job on long

screws, and biggish lathes. The object of a backing belt is the same as this, power being used to revolve the lathe spindle rapidly backwards, and so also run the carriage back, without interfering with the setting of the tool. But it is usually quicker to withdraw the tool and rack the carriage back rapidly by hand, the clasp nut being meanwhile thrown out. The starting point is determined by a stop or a distance piece set from the headstock, at which location the clasp nut is thrown in again, and the cut started.

In dealing with fractional lengths, it must be remembered that the lengths ascertained in which fractional threads total to whole numbers, must either be equal to, or in excess of the length of thread to be cut. Thus if setting has to take place in a length of, say, 7 inches, this setting must be taken, even though the screw to be cut were only 4 inches. And if the length to be cut were 8 inches, the carriage would have to be racked back, not 8 inches, but a multiple of 8, as 16.

The cutting of multiple-threaded screws causes a good deal of trouble, since to the difficulty of setting the tool for a single thread, there is added that of setting in the tool also to cut two, three, or more threads exactly equidistant. Devices are designed to ensure exact setting, but nearly always the turner has to set by the wheel at the end of the spindle and the one that engages with it, making chalk marks on certain teeth, and tooth spaces thus:—

If a double-threaded screw has to be cut, a spindle wheel is selected that has a number of teeth divisible into two equal parts, as 20, 40, &c. Take the cut for one of the threads. Then divide the teeth of the spindle wheel into equal numbers, and chalk the corresponding tooth spaces. Chalk one tooth of the driven wheel which gears with the spindle wheel, making the mark opposite its tooth space in the spindle wheel. Lower the wheel plate, and turn round the lathe spindle until the opposite tooth space chalked is made to gear with the chalked tooth of the driven wheel. Lock the plate, and start the second thread. It is possible to start the cut as the marks come into view without stopping the lathe. If three threads are being cut, the spindle wheel must be divided into three equal numbers, for which a 30, 45, or 60 wheel would be suitable, and the same operation is repeated as in the case of the two-threaded screw.

When the position at which to start a thread has been ascertained, the loose poppet can often be fixed so that the carriage

shall come up and touch it at the right location. Or a distance piece may be interposed between poppet and carriage.

The Hendey-Norton system of change gears has brought about a considerable change in screw-cutting practice since its introduction, a large number of firms besides the Hendey Company having since taken the gear up, and fitted it to their lathes. The principle is the substitution of a fixed train of change gears, and one movable pinion, with suitable indexes, for the movable gears,

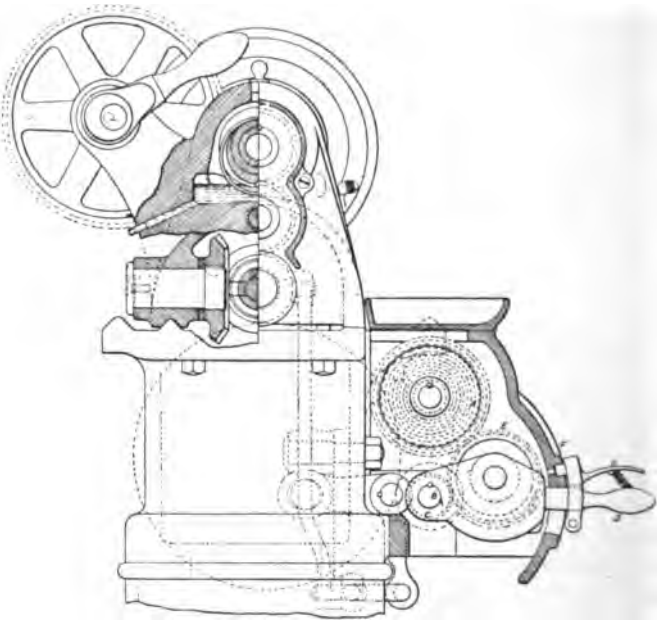

Fig. 339.

which have to be set up afresh for every screw of a different pitch, in the ordinary lathe. The value of the invention as a time saver is great, and it is therefore being gradually applied to lathes of larger dimensions than were originally contemplated.

The details of the Hendey-Norton gear arrangements are seen in the drawing (Fig. 339).

The ordinary train of twelve change wheels A is mounted, cone fashion, on the end of the lead screw, to which they are splined with a key. In the lower part of the containing box

there is a driving shaft B, in bearings parallel with the screw, and this is splined to the full length of the inner side of the box, and has a driving gear, the stud C sliding on it. This stud wheel bears a due relation to the nest of gears to cut the regular list of threads from 6 to 20. Its position is controlled by the handle D, the inner end of which is forked with bearings on each side of the stud gear. In an upper extension of the fork are the bearings for an intermediate wheel E, which is thrown into and out of engagement with the various cone gears, by the handle shown. Proper engagement is ensured by the notches on the index plate F, and the thread which can be cut by each combination is stamped above each notch. The latch G for holding handle and gear in place, is arranged to secure the handle both when in and out, so that the handle cannot be thrown out when the gears are running.

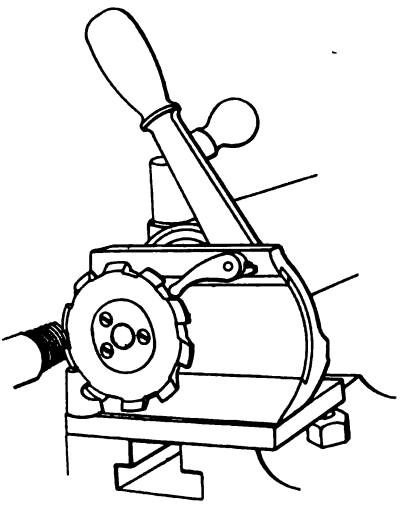

Fig. 340.

The above arrangement gives twelve regular threads only, because the lower shaft has the same rate of rotation as the lathe spindle through equal gears on the outer end of the shaft and the stud. But the range of gears is multiplied by changing these relations, by altering the ratios of the gears.

The splined lead screw is driven as a feed rod from the same gears, and the range of feeds can be increased by the same devices as those used for screw cutting. The reversing device is operated from the apron, and this can be put into operation for moderate speeds, and pitches, while the lathe is in motion.

The Rivett-Dock disc cutter (Fig. 340) is one designed for the special object of cutting screw threads of vee shape, and the disc with cutting teeth is a convenient device for taking successive cuts over the threads until the full depth and shape is completed.

Each tooth on the disc stands a little in advance of the one before it. The cutter is pivoted on a central locking bolt. The successive points are put into operation by a lever and pawl. The pivot is carried by a slide which permits the cutter to be drawn back by the lever, at which stage the pawl is disengaged from a tooth, a movement in the opposite direction rotates the cutter one tooth, and locks it.

Machines, other than automatics, used in the formation of short screws, may be roughly classified as follows:—

Bolt-screwing machines without capstan rests, employed for cutting only the bolt threads. Pin and stud, or screwing or chasing lathes, with capstan rests, used for turning and screwing an almost infinite number of forms. Open-sided spindle capstan lathes, for pins, studs, and specially for bolts. Turret or capstan head screw-cutting lathes, fitted also with change wheels and lead screws, but having a shorter bed than standard screw-cutting lathes. Fox or chasing lathes, with former or copying screws.

But a hard and fast division and classification is not possible on account of the many combinations which occur in lathes for screwing made by different manufacturers. The main differences often consist more in the number and variety of the operations which can be performed, than in any essential difference in design.

Some of the most beautiful mechanisms found in engineers' shops are those used for the formation of the humble studs, screws, bolts, and pins. The shapes and dimensions of these are very varied, yet with one or two exceptions they can be formed wholly in the bolt, and screwing, and chasing lathes, fitted with capstan rests. Studs are formed from the black, or bright bar, and all circular screwed parts are also done. Screws with nicked heads, and bolts with hexagon heads, have to be finished elsewhere, but these are the only exceptions.

The size of the bar which can be operated on in capstan lathes is governed by the size of the hole through the headstock mandrel. The capstan head carries from four to six tools, sometimes eight or ten—sufficient for a set of turning operations necessary on any type of bolt, &c., required. The chasing is done by the tools in the cam, or die plate. Collars also on pins can be turned, cheese heads of screws, and conical heads, and tapers. The work is gripped concentrically with a chuck screwed

over the mandrel nose, having movable jaws which fit within the conical nose. When a large number of similiar pieces have to be made, they are completed singly or in groups, according to their shape. Studs which are screwed at each end are finished first in groups at one end only, until, say, a length of bar is thus used up. Then they are rechucked, and the other ends screwed. Pins which are not screwed are finished singly, the shouldering being done up to the heads, the heads turned, and then parted off, finished. Screws with round or cheese heads, or with conical heads are finished singly, and cut off.

Nicks are cut in screw heads by a saw on the mandrel of a special lathe, the screws being traversed past the saw. Nut faces are cut by milling.

When a single operation only has to be done—that of threading black bolts already forged to shape, or bright bolts already turned elsewhere—then the bolt-screwing machines are used. They resemble the chasing lathes in some respects, but there is no capstan rest, nor screw feed, nor hollow spindle. On the mandrel nose of a bolt-screwing machine, some form of concentric chuck is fitted, and separate dies are supplied for gripping work of different sections.

These machines may be broadly divided into two classes, those in which the bolts are stationary and the dies revolve, and those in which the opposite conditions exist. The advantage of the first arrangement lies in the facility with which bolts can be inserted and removed without stopping the machine, and in avoiding the awkwardness of having long bolts revolving.

In ordinary bolt-cutting and screwing machines, in which more than one chaser is used, the lead of the dies exercises sufficient pull on the bolt or screw being cut. In some of the heavier machines a guide screw is used to help the action of the dies.

The pin and stud screwing, or chasing lathes, though designed primarily for the threading of screws, are used as much or more for purposes of the plain repetitive turning of small bushes, pins, collars, handles, &c. Bars of square or hexagonal section are also chucked as readily as round ones, suitable holders being provided for them. These are of capstan form. They may or may not also include chasing bars. Chasing, strictly speaking, is usually done on a distinct lathe of the Fox type. But chasing of

this class is only adopted for short studs; longer ones must be screwed in the stud lathes.

The Fox chasing lathe is primarily a brassfinisher's lathe, but it is used by engineers for cutting copper fire-box stays. Brassfinishers cut large numbers of their short threads in this lathe. The type is one of the oldest in which screws are cut, these screws being exact copies as regards pitch, though they can be varied in diameter, of the former or short guide screw at the rear end of the headstock. Into this a die nut engages, and slides a shaft at the back of the lathe. On this shaft is a hinged tool holder which carries the chasing tools, and which is carried along in unison with the nut in the former. The holder can be swung back out of the way similarly to the cam blocks in common chasing lathes. In its most complete form a chasing lathe includes, in addition, a capstan rest, rendering it a nearly universal tool. The capstan rest is fitted on compound slides having longitudinal and transverse and swivel movements for taper work. The movements of the saddle are effected by rack and pinion, and in many lathes also by a self-acting shaft below, carrying a worm wheel. The act of pulling over the chasing tool holder brings the die at the rear of the headstock into gear with the copying screw. The latter is operated by gear wheels from the tail of the mandrel.

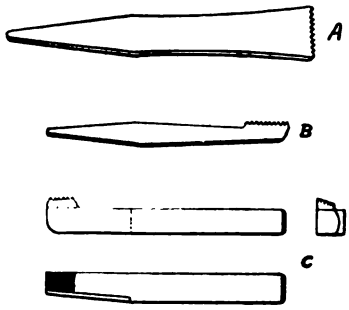

Fig. 341.

Chasers are used for originating threads, especially in optical, and in brassfinishers' work. In engineers' turneries their principal utility lies in effecting slight reductions in the diameters of screws that have been cut by the aid of the lead screw to make too tight a fit into an exact, or an easy fit as required. It is usually safer to do this than to take a very fine cut off a screw, and on short ones it occupies less time. Hand chasers are commonly used for short screws, but for long ones they are held in the slide rest. They are made inside, as well as outside, and in a range of sizes corresponding with the numerous pitches in common use. All the Whitworth threads have

their chasers, and the four gas threads of 26, 19, 14, and 11 threads.

Fig. 341 illustrates chasers, A and B being hand tools, for external and internal threads respectively, and C one gripped in a turret of a chasing lathe.

As differences of opinion have long existed in regard to the relative advantages of chasers and dies for cutting threads in brass work, as in cocks, valves, &c., Mr C. Taylor, of Bartholomew Street, Birmingham, who has been investigating the relative merits of the two systems, arrives at the following conclusions as to the advantages possessed by chasers over dies:—(1) Cheapness of chasers as against dies and die holders, especially self-releasing and self-opening die holders; (2) readiness in sharpening; (3) can be used at *same* speed as turning processes; (4) one chaser can cut many sizes; (5) readiness of adjustment to size; (6) no reversing motion needed; (7) rapid return of chaser; (8) small power required; (9) no liability of running against shoulders of work (as throw-out stop can be used); (10) work can be chased slightly taper if required; (11) delicate work can be chased that could not be held to be screwed or tapped; (12) a cheaper lathe can be used owing to less power required and absence of reversing motion; (13) all six capstan tools can be used for turning and boring operations; (14) chaser brought into operation slightly quicker than tap or die; (15) work can be readily chased on very large diameters, where it would be impossible to use taps or dies; (16) no liability to wrench work out of chuck, so that it can be held lightly; (17) no risk of stripping threads on work; (18) no slow speed required as in screwing and tapping large work; (19) threads cut with chasers are more nearly parallel than when cut with dies.

Taps and dies are credited with the following advantages as compared with the chasing headstock:—(1) Correct sizes of work maintained for longer time; (2) no time lost in adjustment either when beginning work or after sharpening tools; (3) slight gain in time on coarse threads—where work can be firmly held; (4) small holes more readily tapped than chased; (5) self-opening dies have rapid return, are easily sharpened, and readily adjusted for size; (6) they do not require grinding so often as chasers.

From these considerations it is suggested that it is more advantageous to tap and screw work of small sizes, such as can be

done at the same speed and power as for turning, but that for larger sizes the chasing arm is preferable. The manufacturer, Mr Taylor thinks, will be well advised to use both on the same lathe for general work, while for rapid and accurate work he recommends self-opening dies or some form of die that can be readily sharpened and adjusted for size; he would use the chaser on delicate work or that which cannot be held firmly. It is, of course, important to always keep the taps and dies sharp. If solid dies are used, they should be employed in self-releasing tap or die holder for work having shoulders or requiring to be screwed to accurate distances; in a plain tap or die holder otherwise. The time occupied in screwing work with the die or the chaser is generally about equal, but a good chasing lathe is necessary to get satisfactory results.

The screw threads now in existence, spite of attempts at unification, number considerably more than fifty. This anomaly

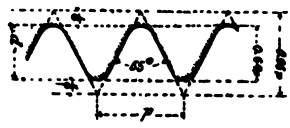

Fig. 342.

is explained to a large extent by the fact that most Continental railway companies have their own special systems, and several have more than one system in use. Government arsenals, navy yards, and private engineering works have different systems.

But when narrowed down to national standards, barely more than half a dozen are in use. The Whitworth is employed chiefly in Great Britain, the United States, and Germany; the Sellers, or Franklin Institute thread in America—so termed because the Institute adopted and sanctioned the Sellers type. The American sharp vee thread is the older American system, the Sauvage—the French system, the Delisle—German, the Thury, for some special work, the International, the British Association, for fine threads, and electrical work, and the Acme.

The Whitworth thread is shown in Fig. 342. The depth of this thread is equal to 0.64 of the pitch. The sides of the thread make an angle of 55° with each other, the top and bottom being rounded to one-sixth the depth.

Whitworth Standard Thread.

Diameter - - -	$\frac{1}{4}$	$\frac{5}{16}$	$\frac{3}{8}$	$\frac{7}{16}$	$\frac{1}{2}$	$\frac{9}{16}$	$\frac{5}{8}$	$\frac{11}{16}$
No. of Threads per inch	20	18	16	14	12	12	11	11
Diameter - - -	$\frac{3}{4}$	$\frac{13}{16}$	$\frac{7}{8}$	$\frac{15}{16}$	1	$1\frac{1}{8}$	$1\frac{1}{4}$	$1\frac{3}{8}$
No. of Threads per inch	10	10	9	9	8	7	7	6
Diameter - - -	$1\frac{1}{2}$	$1\frac{5}{8}$	$1\frac{3}{4}$	$1\frac{7}{8}$	2	$2\frac{1}{8}$	$2\frac{1}{4}$	$2\frac{3}{8}$
No. of Threads per inch	6	5	5	$4\frac{1}{2}$	$4\frac{1}{2}$	$4\frac{1}{2}$	4	4
Diameter - - -	$2\frac{1}{2}$	$2\frac{5}{8}$	$2\frac{3}{4}$	$2\frac{7}{8}$	3	$3\frac{1}{8}$	$3\frac{1}{4}$	$3\frac{3}{8}$
No. of Threads per inch	4	4	$3\frac{1}{2}$	$3\frac{1}{2}$	$3\frac{1}{2}$	$3\frac{1}{2}$	$3\frac{1}{4}$	$3\frac{1}{4}$
Diameter - - -	$3\frac{1}{2}$	$3\frac{5}{8}$	$3\frac{3}{4}$	$3\frac{7}{8}$	4			
No. of Threads per inch	$3\frac{1}{4}$	$3\frac{1}{4}$	3	3	3			

Whitworth Standard Screwing Threads, for Gas, Water, and Steam Tubes and Fittings.

(*Adopted by the Tube Trade generally.*)

Nom'l Internal Dia. of Pipe.	External Dia. of Pipe.	Dia. at Bottom of Thread.	Number of Threads per inch.	Nom'l Internal Dia. of Pipe.	External Dia. of Pipe.	Dia. at Bottom of Thread.	Number of Threads per inch.
$\frac{1}{8}$	.382	.336	28	$1\frac{3}{4}$	2.047	1.93	11
$\frac{1}{4}$	.518	.451	19	2	2.347	2.23	11
$\frac{3}{8}$	.656	.589	19	$2\frac{1}{4}$	2.587	2.47	11
$\frac{1}{2}$	.826	.734	14	$2\frac{1}{2}$	3.0	2.882	11
$\frac{3}{4}$	1.04	.949	14	$2\frac{3}{4}$	3.247	3.13	11
1	1.309	1.192	11	3	3.485	3.368	11
$1\frac{1}{4}$	1.65	1.533	11	$3\frac{1}{2}$	3.912	3.795	11
$1\frac{1}{2}$	1.882	1.765	11	4	4.339	4.223	11

The height of a Whitworth thread is 0.64 the pitch. Therefore the hole in the nut must be smaller than the tap by 1.28 the pitch. Take 1.28 as a constant, and divide by the pitch to be screwed, subtracting the product from the diameter of tap.

Fig. 343.

The Sellers thread is shown in Fig. 343. Its depth is equal to 0.65 the pitch. The sides form portions of an equilateral triangle (60°), flattened at top and bottom to one-eighth the depth.

Sellers, or United States Standard Thread.

Diameter - - -	$\frac{1}{4}$	$\frac{5}{16}$	$\frac{3}{8}$	$\frac{7}{16}$	$\frac{1}{2}$	$\frac{9}{16}$	$\frac{5}{8}$
No. of Threads per inch	20	18	16	14	13	12	11
Diameter - - -	$\frac{3}{4}$	$\frac{7}{8}$	1	$1\frac{1}{8}$	$1\frac{1}{4}$	$1\frac{3}{8}$	$1\frac{1}{2}$
No. of Threads per inch	10	9	8	7	7	6	6
Diameter - - -	$1\frac{5}{8}$	$1\frac{3}{4}$	$1\frac{7}{8}$	2	$2\frac{1}{8}$	$2\frac{1}{4}$	$2\frac{3}{8}$
No. of Threads per inch	$5\frac{1}{2}$	5	5	$4\frac{1}{2}$	$4\frac{1}{2}$	$4\frac{1}{2}$	4
Diameter - - -	$2\frac{1}{2}$	$2\frac{5}{8}$	$2\frac{3}{4}$	$2\frac{7}{8}$	3	$3\frac{1}{8}$	$3\frac{1}{4}$
No. of Threads per inch	4	4	4	$3\frac{1}{2}$	$3\frac{1}{2}$	$3\frac{1}{2}$	$3\frac{1}{2}$
Diameter - - -	$3\frac{3}{8}$	$3\frac{1}{2}$	$3\frac{5}{8}$	$3\frac{3}{4}$	$3\frac{7}{8}$	4	
No. of Threads per inch	$3\frac{1}{4}$	$3\frac{1}{4}$	$3\frac{1}{4}$	3	3	3	

The older American or sharp vee thread is hardly likely to survive. It has been displaced largely by the Sellers, and is not employed at all outside of the States. It is a thread of 60° angle, not truncated.

Sharp Vee Thread.

Diameter - - -	$\frac{1}{4}$	$\frac{5}{16}$	$\frac{3}{8}$	$\frac{7}{16}$	$\frac{1}{2}$	$\frac{9}{16}$	$\frac{5}{8}$	$\frac{11}{16}$
No. of Threads per inch	20	18	16	14	12	12	11	11
Diameter - - -	$\frac{3}{4}$	$\frac{13}{16}$	$\frac{7}{8}$	$\frac{15}{16}$	1	$1\frac{1}{8}$	$1\frac{1}{4}$	$1\frac{3}{8}$
No. of Threads per inch	10	10	9	9	8	7	7	6
Diameter - - -	$1\frac{1}{2}$	$1\frac{5}{8}$	$1\frac{3}{4}$	$1\frac{7}{8}$	2	$2\frac{1}{8}$	$2\frac{1}{4}$	$2\frac{3}{8}$
No. of Threads per inch	6	5	5	$4\frac{1}{2}$	$4\frac{1}{2}$	$4\frac{1}{2}$	$4\frac{1}{2}$	$4\frac{1}{2}$
Diameter - - -	$2\frac{1}{2}$	$2\frac{5}{8}$	$2\frac{3}{4}$	$2\frac{7}{8}$	3	$3\frac{1}{8}$	$3\frac{1}{4}$	$3\frac{3}{8}$
No. of Threads per inch	4	4	4	4	$3\frac{1}{2}$	$3\frac{1}{2}$	$3\frac{1}{2}$	$3\frac{1}{4}$
Diameter - - -	$3\frac{1}{2}$	$3\frac{5}{8}$	$3\frac{3}{4}$	$3\frac{7}{8}$	4			
No. of Threads per inch	$3\frac{1}{4}$	$3\frac{1}{4}$	3	3	3			

The system of Professor Sauvage, largely adopted in France, is the Sellers modified to suit the metric pitches. That is, the threads form sections of an equilateral triangle, truncated on the point, and root, with parallel lines at depths of one-eighth of the depth of the triangle. The feature peculiar to the system is that it comprises a series of even diameters, the initial pitch commencing at one millimetre, and increasing by half millimetres for each successive size, as plotted in Fig. 344.

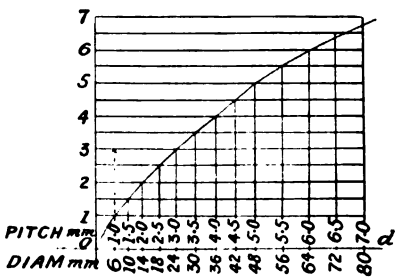

Fig. 344.

In the German Delisle system the screw threads form a portion of an isosceles triangle, inscribed in a rectangle (Fig. 345), having the base equal to the height, and the top and bottom truncations are equal to one-eighth the depth. This gives a fractional angle, 53° 8′, to the sides of the threads.

The Thury thread (Fig. 346) is in use among watchmakers. It is of Swiss origin, produced by M. Thury, under the auspices of the Society of Arts of Geneva. There is, however, a larger series

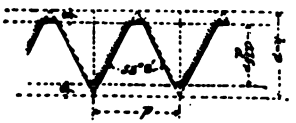

Fig. 345.

Fig. 346.

of Thury threads for general mechanical purposes. It is a vee thread of $47\frac{1}{2}°$ of angle, with the top and bottom rounded through two-elevenths of the height. The pitch p is related to the diameter d by the formula $p\ \frac{6}{5}$. As this will give an unlimited series of sizes, it was decided to adopt the successive powers of 0.9 millimetre for the pitch. The index of the power is used as a convenient designating number for the screws. Thus the pitch of

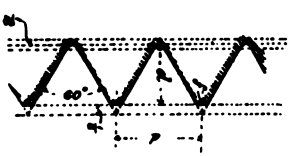

Fig. 347.

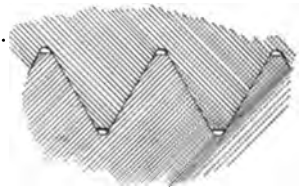

Fig. 348.

No. 6 screw is obtained by raising 0.9 mm. to the sixth power, the pitch being therefore 0.53 mm. From the series so obtained in decimals of a millimetre a series is got in decimals of an inch.

The International system, proposed at the Congress at Zurich, (1898), and recommended by that body, embodies an equilateral triangle having the base equal to the pitch (Fig. 347), one-eighth of the depth is truncated from the tips, and left flat, and one-sixteenth is filled in at the roots with a radius. Fig. 348 shows how the threads fit with the flat and radius.

International Standard Thread (Metric System).

Diameter, mm.	6	7	8	9	10	11	12	14
Pitch, mm.	1.0	1.0	1.25	1.25	1.5	1.5	1.75	2.0
Diameter, mm.	16	18	20	22	24	27	30	33
Pitch, mm.	2.0	2.5	2.5	2.5	3.0	3.0	3.5	3.5
Diameter, mm.	36	39	42	45	48	52	56	60
Pitch, mm.	4.0	4.0	4.5	4.5	5.0	5.0	5.5	5.5
Diameter, mm.	64	68	72	76	80			
Pitch, mm.	6.0	6.0	6.5	6.5	7.0			

The British Association thread (Fig. 349) is for small work, chiefly for the use of electricians, &c. The angle is $47\frac{1}{2}°$, the top

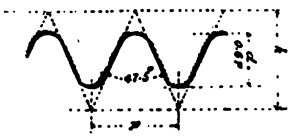

Fig. 349.

Fig. 350.

and bottom are rounded, leaving the depth 0.6 of the pitch. The rounding is very nearly two-elevenths of the pitch.

British Association Standard Thread.

Number - -	0	1	2	3	4	5	6
Diameter, mm.	6.0	5.3	4.7	4.1	3.64	3.2	2.8
Pitch (p), mm.	1.00	0.90	0.81	0.73	0.66	0.59	0.53
Number - -	7	8	9	10	12	14	19
Diameter, mm.	2.5	2.2	1.9	1.7	1.3	1.0	.79
Pitch (p), mm.	0.48	0.43	0.39	0.35	0.28	0.23	0.19

The Acme thread (Fig. 350), used in America and England, lies between the vee and the square thread. The depth d of the thread $= \frac{1}{2}$ the pitch $+ .010$. The width of flat on top of thread $= p \times .3707$, and the angle of the sides is 29°.

The following table is useful in the small dimensions which occur in screw-cutting work.

Table of Decimal Equivalents of 8ths, 16ths, 32nds, and 64ths of an Inch.

8ths.	16ths.	32nds.	
$\frac{1}{8}$ = .125	$\frac{1}{16}$ = .0625	$\frac{1}{32}$ = .03125	$\frac{17}{32}$ = .53125
$\frac{1}{4}$ = .250	$\frac{3}{16}$ = .1875	$\frac{3}{32}$ = .09375	$\frac{19}{32}$ = .59375
$\frac{3}{8}$ = .375	$\frac{5}{16}$ = .3125	$\frac{5}{32}$ = .15625	$\frac{21}{32}$ = .65625
$\frac{1}{2}$ = .500	$\frac{7}{16}$ = .4375	$\frac{7}{32}$ = .21875	$\frac{23}{32}$ = .71875
$\frac{5}{8}$ = .625	$\frac{9}{16}$ = .5625	$\frac{9}{32}$ = .28125	$\frac{25}{32}$ = .78125
$\frac{3}{4}$ = .750	$\frac{11}{16}$ = .6875	$\frac{11}{32}$ = .34375	$\frac{27}{32}$ = .84375
$\frac{7}{8}$ = .875	$\frac{13}{16}$ = .8125	$\frac{13}{32}$ = .40625	$\frac{29}{32}$ = .90625
	$\frac{15}{16}$ = .9375	$\frac{15}{32}$ = .46875	$\frac{31}{32}$ = .96875

64ths.

$\frac{1}{64}$ = .015625	$\frac{17}{64}$ = .265625	$\frac{33}{64}$ = .515625	$\frac{49}{64}$ = .765625
$\frac{3}{64}$ = .046875	$\frac{19}{64}$ = .296875	$\frac{35}{64}$ = .546875	$\frac{51}{64}$ = .796875
$\frac{5}{64}$ = .078125	$\frac{21}{64}$ = .328125	$\frac{37}{64}$ = .578125	$\frac{53}{64}$ = .828125
$\frac{7}{64}$ = .109375	$\frac{23}{64}$ = .359375	$\frac{39}{64}$ = .609375	$\frac{55}{64}$ = .859375
$\frac{9}{64}$ = .140625	$\frac{25}{64}$ = .390625	$\frac{41}{64}$ = .640625	$\frac{57}{64}$ = .890625
$\frac{11}{64}$ = .171875	$\frac{27}{64}$ = .421875	$\frac{43}{64}$ = .671875	$\frac{59}{64}$ = .921875
$\frac{13}{64}$ = .203125	$\frac{29}{64}$ = .453125	$\frac{45}{64}$ = .703125	$\frac{61}{64}$ = .953125
$\frac{15}{64}$ = .234375	$\frac{31}{64}$ = .484375	$\frac{47}{64}$ = .734375	$\frac{63}{64}$ = .984375

CHAPTER XV.

Examples of Turret Work.

Advantages of the Common Capstan—Tool Setting—Distinct Operations in—Range of Utility—Automatic Turret Lathes—Economies of—Typical Tools Illustrated—Centring and Facing—Box Tools—Drilling—Reamering—Work of the Cross Slide—Profiling—Posts—Tools—Screw Cutting—Limits to the Use of Dies—Solid Dies—Cutting Edges—Sizing Dies—Spring Dies—Chasers—Distortion—Opening Dies—Examples of—Examples of Work done on Automatics—Hotchkiss Percussion Fuse Base—Special Recessing Tool—Valve for Pneumatic Hammers—Tool Points—Whirls—Sleeves—Bolsters—Crank Pins—Shell and Cap—Loose Turret for Poppet Spindle.

THE common capstan tool rest can be applied to heavy lathes as well as light, to face lathes, as to lathes with movable poppets. Even where similar parts have to be tooled in but small numbers, the tooling involving several different operations, the rest, with its five or six holders, any of which can be brought round to its work in an instant, is an obvious saving over the method of having to set each tool separately for each particular piece, as it avoids several rechuckings. The higher the degree of accuracy required in any piece of work, the longer will the tool setting occupy. Obviously, then, more time can be afforded in repeat work for setting tools which will not be moved except for regrinding, than when they have to be used on one piece only. The capstan rest, therefore, conduces to accuracy, as well as to economy of time.

Capstan work, of course, is of highest value when it is adopted as a regular system. But if applied more frequently to the slide rest instead of the common holder for a single tool, lathe work would be greatly expedited, and be finished with greater precision.

For turning work between centres, tools held in the capstan rest are as suitable as those in a tool holder, but with the additional advantage that when several similar pieces have to be

done, the diameters can be set by stops; and the turning of steps or collars, &c., of different diameters can be done by separate tools. Roughing and finishing also can be performed by distinct tools set once for all. In chuck work, again, turning, drilling, and boring can be done with celerity. A boring tool or a drill held in a capstan rest, and steadied, if necessary, in a bored steady bolted to the lathe bed, furnishes about the most efficient method of boring available. A rough cut can be taken thus, and a true finishing cut afterwards with a reamer held in the next hole in the turret. Wheels, pulleys, brasses, bushes, and other work having deep or shallow holes, can be done thus as truly, and more rapidly than they can be done in the boring lathe, or in the common lathe, or drilling machine. Taps are held thus, and brought round to form threads in holes which have been first drilled from the same rest. Tools also with edges of any contour can be inserted to impart or finish any required outlines. Recesses, bevels, or chamfers on internal or external portions can be formed. A large number of operations can be performed on inner or outer faces by means of special nests of tools, or box tools, furnished with shanks to fit the recesses in the capstan head. These include screwing tools, either of the chaser form, or solid, or opening dies; and turning tools arranged for working on external surfaces to obtain uniform results in repetitive work without measurement. Such surfaces may be parallel, tapered, shouldered, or stepped, and the arrangements will therefore be devised to suit any given job. These and other applications can be effected in a common lathe with a capstan rest.

The value, therefore, of the capstan lathe consists in the facility which it affords for almost any repetitive work of small dimensions. For odd jobs it possesses no special advantages. But when scores, or hundreds of similar pieces are required, the economy afforded is immense, whether for turning, or screwing, or for both. A black rod may be taken and thrust through the hollow mandrel in successive lengths suitable for the work to be done, and the finished pieces are parted off. A wire feed is used on many lathes to feed the bar forward automatically, the length of feed being adjustable. In such a feed, the length is regulated by a stop, and the movement which brings the wire forward, often closes the jaws of the chuck, gripping it firmly. When there are large collars, heads, or bulbs on forgings, this is a

class of work for which the open spindle lathes are most useful. When differences in diameter are not great, and the lengths to be reduced are moderate, then it is always better to turn down from parallel bars instead of troubling with forgings, the cost of turning being often less than the cost of forging alone. Though some amount of time is occupied in setting the tools, and imparting to them the most suitable forms, this is immensely compensated by the facility with which the subsequent work is done, and by the practical uniformity in dimensions of any number of similar pieces. Economy is also effected by the use of adjustable stops for arresting the movements of tools at any precise stage required. There may be one stop only, but in the more complete lathes there is a separate stop for every tool.

A complete turret lathe, according to present ideas, must be one in which no attendance is necessary beyond the insertion of a length of several feet of bar in the rear of the hollow spindle, and occasional lubrication of bearings. The machine feeds the bar, and closes the chuck, the turret tools come round automatically, tools on the cross slide are similarly operated, the finished work is thrown out, and the lubrication of the cutting tools at the surface of the work is also done without care on the part of the attendant. In consequence the cost of attendance is almost a negligible quantity, because one man is free to attend to several machines. The term automatics is commonly applied to these.

It is not necessary that a firm shall deal wholly in a large volume of specialities in order to reap some of the benefits which can be secured by the use of automatics. The tendency in recent years has been to extend the capacities of these machines in such ways as to widen their utilities. They are screw machines still, but they are also in their various types, fully automatic turning machines, rivals of the special lathes, and tools, which require constant attendance. Some machines of this class deal, too, with castings of fair size, and to reduce the cost of attendance in this case, a magazine attachment is a feature which has been added to some of these. Every now and again, also, a new machine is brought out, or an existing one is modified, in order to meet the demand for higher efficiencies; and these facts indicate that the last word has not yet been said on automatics. The demand for them grows as they become better known, because, although primarily designed for the production of specialities, they are also

eminently adaptable to the requirements of nearly all classes of shops. In the first kind of factory these machines are occasionally to be counted by many scores, and even hundreds; in the second it pays to lay down two or three only.

In dealing with this extensive subject here the scope of this work requires that our remarks be concentrated on the nature of the work done.

When we see pieces of work which involve in their production several distinct operations by separate tools, and note the total output for the day on one automatic machine, familiarity with these facts does not much lessen our astonishment at the results. They are so marvellous that it is nearly impossible to institute a just comparison between these and the work done in ordinary lathes, for it is a matter of minutes against hours, in some cases even of seconds against hours. Superadded to this economy is the fact that the product of the machine is for all practical purposes uniform, while that of hand work in the lathe is not, excepting at the expenditure of an extended and indefinite amount of time.

These economies are produced in various ways: First, by the utilisation of the turret; then by so timing the movements of the work and of the tools that no time shall be lost in commencing a fresh cut. This involves bringing the turret tools round and up to the work at a much quicker speed than that required for the actual cutting. Another important point is to time the cycle of operations on a given piece of work to coincide with the revolution of the turret, and so avoid lost movements. In many instances things can be so arranged as to produce two pieces during one revolution, the pieces being either alike, or dissimilar.

Efforts are also directed to the rapid removal of material. Since the reduction of portions of parallel bars to small dimensions is often called for, this rapid reduction is effected not so much by any special forms of tool, as by the fullest lubrication, and by supporting the work in opposition to the thrust of the tool, which is done by combining the latter and its supporting steady in one box, a principle which is carried out in a variety of ways. Here we have not so much the results of a scientific study of cutting tools as that of the prevention of vibration, and heating of the tools and the work. There is no time lost in measuring the work as it is being reduced, or in ascertaining by trial when to arrest the action of the tools, for that is already embodied in the machine

itself—in the tool holder, and in the stops, and release of the cams.

Then, there is provision made for varying the cutting feed to suit different metals and alloys, and also for varying the speed of revolution of the work. And all movements are automatic in character, both of the material being operated on, and of the turret, so that when tools are fixed up and stock inserted, no further attendance is required until the bar is used up. Contributory to results is the rigidity afforded to bearings, and moving parts in the machines themselves, in which respect many improvements over earlier practice are apparent in the later designs. And then finally having arrived at the limits which are at present obtained in these devices, we have types of machines in which the number of spindles is multiplied, so trebling or quadrupling the output of a single-spindle machine.

In the automatic screw machines, we find both vertical and horizontal turrets employed indifferently in machines which appear to be equally meritorious and successful. Though each possesses some theoretical advantages over the other, in practice they are both favourites. A feature which is common to all automatic screw machines is the feeding by means of cams. But these again are subject to variation in design. The drum type predominates, admitting as it does of such ready and simple readjustments. The mechanisms for feeding stock also vary, and so do other details; but a study of these, though interesting, must be subordinated to that of the utilities of the machines themselves. The principal question for a shop manager is, What will a given machine perform, what are its capacities, its range of work? And the question will be differently answered according to the class of work which is done by a firm, both in regard to size, and also whether of one sort only, or of a varied character. With respect to size, recent years have witnessed considerable increase, until now bars of 3 or 4 in. are within the capacities of automatics, with corresponding extension in length; castings, also, up to 16 or 18 in. diameter are now brought within their range, these developments all tending to render these machines more adaptable to the work of the less highly specialised shops. The inevitable tendency now is to transfer a larger range of work from lathes and common screwing machines to the automatics, with advantage and economy.

The principal function of the automatic screw machine is the

formation of screw threads, and the performance of the operations preparatory thereto, and connected therewith. The number of screws of many forms used in engineering construction is so enormous that it is necessary that they be produced cheaply and accurately. We therefore find that a vast deal of inventive skill has been devoted to the methods by which they are produced. But these only constitute a portion of screw-machine practice, since many other pieces of work are also shaped by means of tools operated in the machine. The economy of the automatics becomes that of the cost of fixing up things, and of the number of similar pieces *versus* the cost of the work in the lathe, which needs constant attention. But expense lessens when the system is in full swing with stock tools, so that there are numerous cases when,

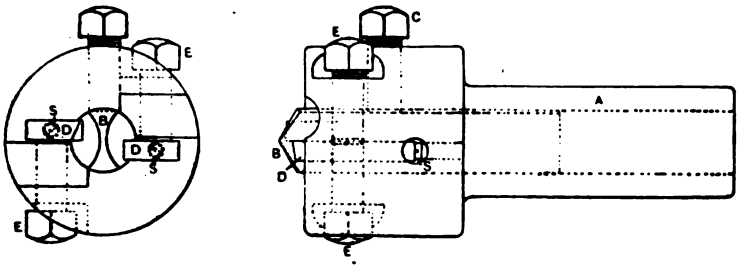

Fig. 351.

with plain work, and having tools in stock, the fixing up for a given piece of work may be done easily within an hour.

When commencing bar work on an automatic, the bar is centred, and generally faced, to facilitate the work of the tools that immediately follow. A combined centring and facing tool by Alfred Herbert Limited is shown in Fig. 351. Its shank A of mild steel fits into a hole in the turret, and the head carries the centring tool B, pinched by a set screw C. The facing tools D, D, are pieces of plain steel bar bevelled at the front face and having no top rake. Each tool is pinched by one screw E. Endlong adjustment is effected by causing the end of the tool to take a bearing against the head of a grub screw S at the bottom of the tool recess.

Turning is done with box tools. These are designed with a view to preventing spring due to overhang, and to ensure that the

tools shall turn to exact dimensions within predetermined limits, apart from any attention on the part of the man in charge. They are subject to much variation in form, and may contain one, or more cutters. Roughing and finishing cutters may be held in

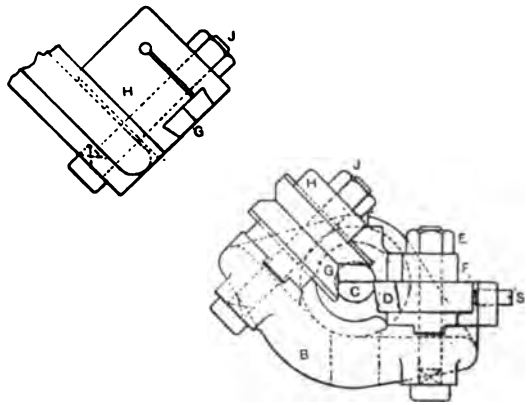

Fig. 352.

separate boxes, or combined in one box. Each cutter in the best types has a vee'd steady set opposite it, and both steady and cutter are readily adjustable for diameter. At the end of the box, a facing cutter is often inserted for truing the end of the bar. A

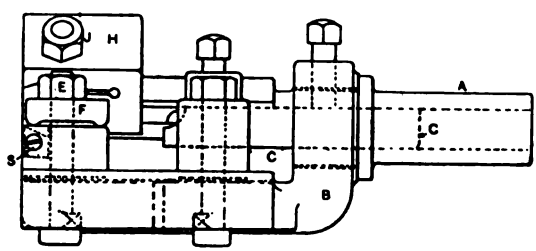

Fig. 353.

box tool of this type is shown in Figs. 352 and 353. In this a cast-iron box is fitted with cutting tools of the knife-edge type, and the diameter to be turned is controlled by the vee strips.

In these figures the shank A fits into one of the holes in the turret, in which it is pinched. The body B is threaded to fit over

the shank. An internal tool C, adjustable longitudinally, pinched with a set screw (Fig. 353), gives the length to be turned, and faces the end of the work. The tools D are adjustable radially by grub screws S, and they are clamped by the nut E and washer F. The vee steadies G are double-ended, so that they can be turned round in their holders to suit work of different diameters, the range of which is larger, of course, with the vee than with

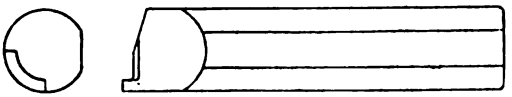

Fig. 354.

circle arcs. The block H that carries the steadies is grooved into the casting B, into which it is secured with a bolt J. The edges of the steadies are bevelled (see Fig. 352). The block H in which they are held is slotted to form a spring holder, the clamping being done with the bolt J.

When two tools are used, the second one is an exact duplicate of D, and steadies, &c., are reproduced, these being carried back along the holder or box, which is lengthened for the purpose. Fig.

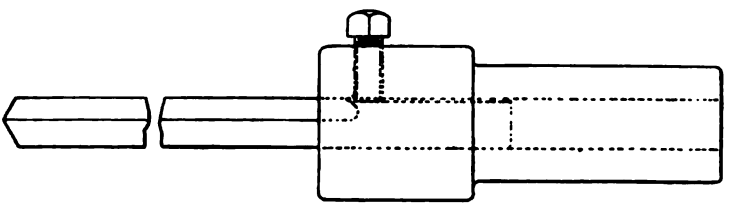

Fig. 355.

353 has a steady boss to support the ending cutter when brought out to a considerable distance from its support.

An end rounding or chamfering tool is seen in Fig. 354. It is fitted interchangeably with C in Figs. 352 and 353, and faces and rounds at once.

Drilling and reaming are done with tools carried in holders that fit in the turret. A two-fluted drill is shown in Fig. 355, carried thus and pinched with a set screw.

An oil supply two-flute drill is shown in Fig 356. The oil supply is automatically turned on and pumped along the flutes when the turret is turned round to the right position for drilling.

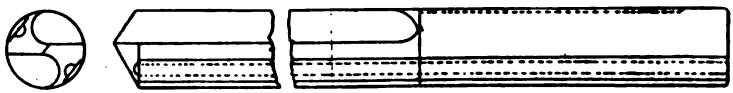

Fig. 356.

A reamer follows the drill (Fig. 357). It is of the D-bit type, and has an oil tube. Fig. 358 illustrates a floating reamer, which

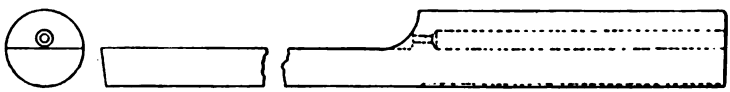

Fig. 357.

unlike its predecessor, follows the hole already drilled and reamered very close to size, and finishes it. This also has an oil-supply tube,

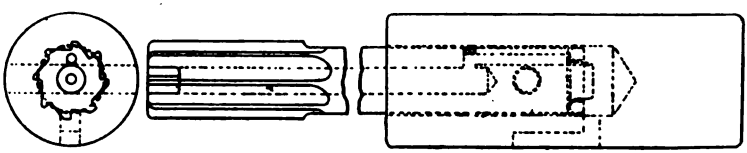

Fig. 358.

and represents the best practice in this department of turret work. Fig. 359 is an oil supply shank to box tools.

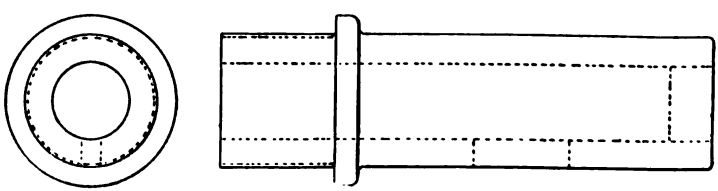

Fig. 359.

When square and hexagon bars are to be turned down for a portion of their length, the work of the turning tool is preceded by

that of a starting tool. This is a box tool with three radial cutters in slots in its interior. This chamfers or points the end of the bar, and faces the end preparatory to the work of the turning tool. The chamfering is not necessary when round bars are to be turned, except when the latter are rather long and project from the chuck considerably.

In the tools and tool boxes used for turret work, no workmanship but the very best is permissible. Turned and planed fits

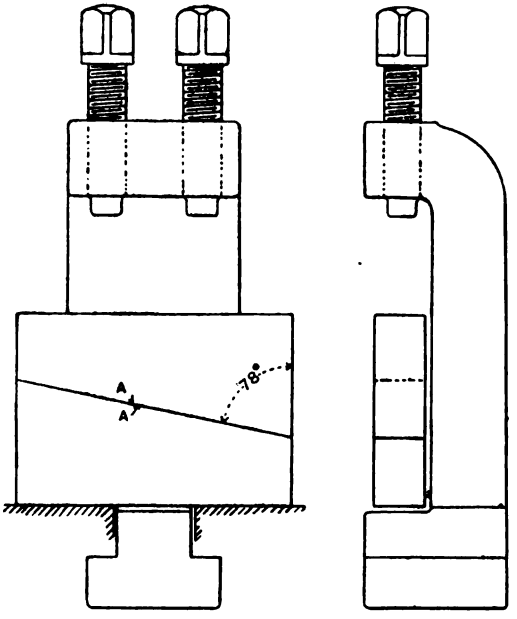

Fig. 360.

alone are not good enough for permanent service. The grinding machine is an indispensable aid, and so is the reamer following the drill when fitting pins into holes. The fitting must be as good as the work done by the tools, and therefore a properly equipped tool room is an indispensable adjunct to the automatic machines.

The work done by tools on the cross slide comprises turning forming, knurling, and cutting off, and is usually supplementary to that done upon the turret. The cross slide does not traverse; hence turning that requires a long traverse is performed from the

turret. But broad surfaces of several inches in length are tooled by the cross slide when the profiles are irregular, because the turret is not adapted for producing such shapes. In profiling, the total width is cut at once, the tool being made sufficiently wide.

There are two tool holders in the cross slide, one at the front, and one at the back. One of these may carry a roughing profile tool, the other a finishing tool. But generally one slide carries the forming tool, the other a cutting-off tool, which also may fulfil some lesser function, as rounding an edge next the cut-off end. These slides are operated from the cam shaft, and a disc carrying adjustable dogs, which are set to actuate the slides at

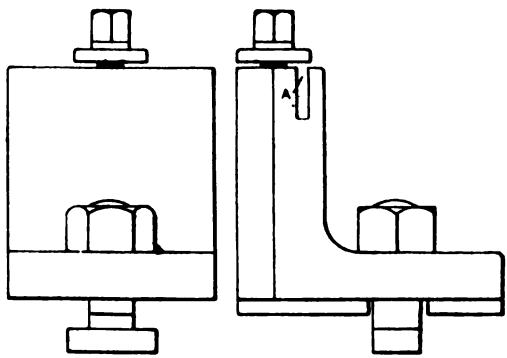

Fig. 361.

the exact times when the tools are wanted to come up to their work, in conjunction with, or on the completion of, that done by the turret-operated tools.

Tools operated in cross slides are variously held. The open side tool posts of Alfred Herbert Limited (Fig. 360) permit the tools to come up very close to shoulders, and afford a convenient means of adjustment for the height of tool. This is done by the wedges, the meeting faces A of which are serrated to prevent possible slip during tightening or under heavy cutting. The tool is pinched between the top face of the upper wedge and the arched top of the holder by means of set screws. The holder is carried in the tee groove of the rest.

A tool post for a cutting-off tool is shown in Fig. 361. The

tool of thin steel drops into the slot A, and is tightened by the set screw and washer. Another type is illustrated in Fig. 362, the tool A being held in a slotted tool post somewhat similar to that of a common lathe of American type.

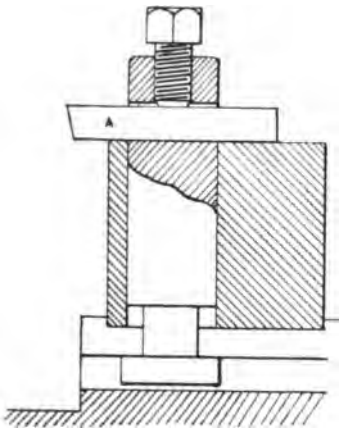

Fig. 362.

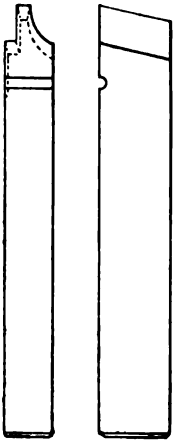

Fig. 363.

A type of tool which combines the function of cutting off and also of finishing a radius is shown in Fig. 363. If a tool of this kind is not employed in certain kinds of work, a sharp corner is left, which must be finished off in some other fashion; but by

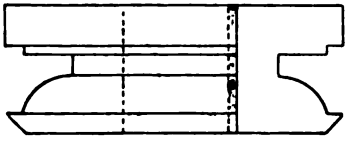

Fig. 364.

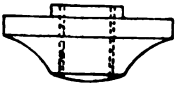

Fig. 365.

accomplishing this with the tool shown, the cut-off end is finished as it comes from the automatic.

A type of forming tool held in a cross slide is shown in Fig. 364. It is a circular disc having its edge profiled or turned to the section that is to be turned—in this case a bicycle cone (Fig. 365)—and notched out to form the cutting edge. Grinding is

done across the face of the notch, and the tool never loses its correct shape. Fig. 366 is a tool of a similar character.

An excellent example of the work done upon a cross slide is that of turning cycle hubs. The illustration (Fig. 367) shows a couple of tools used for forming the outside of a hub—the roughing tool A and the finishing tool B—with the hub C appearing as just roughed out, from a plain piece of bar originally the diameter over the flanges, and fed through the hollow spindle. These forming tools operate at one time, balancing the stress of cutting, a stress which is necessarily very severe, as the actual length of cut must be measured all round the flanges, &c. This forming requires a stiff machine, a broad belt drive, and strong back gearing. Generally, also, a drill in the turret is roughing out the hole in the interior of the hub, simultaneously with the outside forming, and the hub when finished is only a thin shell, so that a large quantity of material has to be removed.

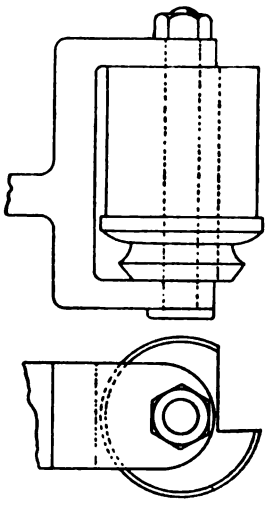

Fig. 366.

The depth of the grooves D is slightly greater than that of the thickest chip cut, and as soon as the roughing tool has roughed down nearly to the finished size, it is withdrawn and the finishing tool comes up and completes the work. In cases where two tools are thus occupied in turning, a third one is provided for cutting off, and this takes the form of an auxiliary slide driven from an extra cam disc.

Fig. 368 is a tool in its holder used for profiling ball handles, as used on lathes, and other machine tools. The rounded end in such cases, near the head of the machine, is cut off and also finished with the form cut-off tool in Fig. 363, which rounds the ball end while it is cutting off, and the handle falls from the machine with a practically perfect globular end.

The stress of cutting broad faces with the forming tool is very severe, which work of small size would yield under, and all except

heavy pieces would chatter. So an equivalent of the poppet centre of the ordinary lathe must be provided, and this is afforded

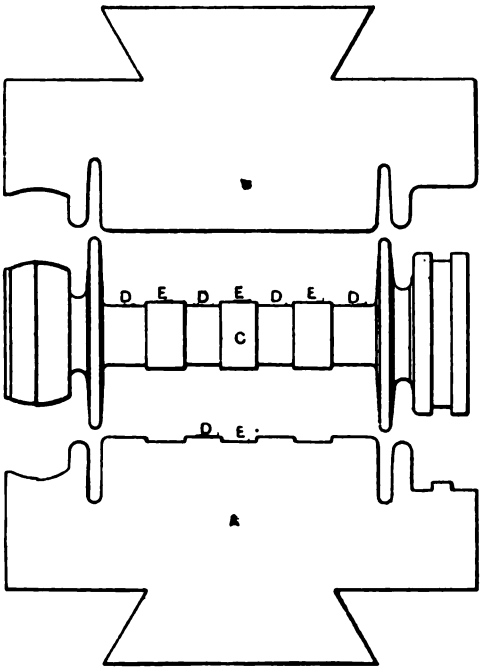

Fig. 367.

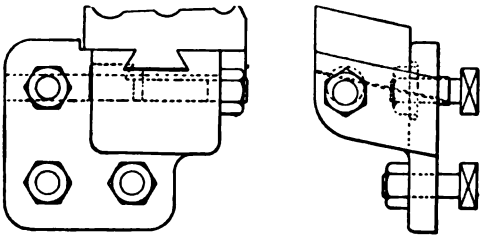

Fig. 368.

by the steady bush holder (Fig. 369). This is a hollow socket provided with a hardened bush, which encircles and supports the end of long work. The method is to bring up a box tool in the

turret and turn a short length on the end of the bar of a diameter equal to that of the hole in the steady bush. The box tool then draws back, the turret revolves, and the steady bush is brought up until it just slips over the turned end, supporting it rigidly against lateral strain. Then the forming tool on the cross slide comes and proceeds with the forming operation, the turret, with the steady, remaining stationary during this time. Bushes of various dimensions are interchangeable in the holder.

The cutting of screws by means of tools held in the turret is done by two general methods. In one case a single-pointed tool only is used; in the other a group of chasers is employed. The single-pointed tool requires a guide, the chasers lead themselves. In the first instance the tool is controlled by a lead screw, or by

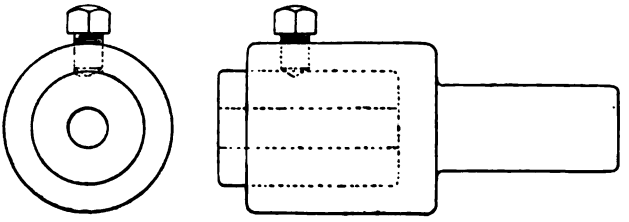

Fig. 369.

a former screw, or by a cam. In the second, the tool slide moves bodily, drawn by the chasers.

It is always stated that dies will cut screws at one traverse, excepting in the case of square threads. As a matter of policy, it is often better, in threads of moderate dimensions, to make two cuts, because the screws cut are likely to be more accurate, and the dies are less distressed. And the revolution of the work should not be stopped while the chasers are cutting.

Though the use of three dies is the English practice, four-die screw apparatus is supplied when required.

All screwing operations on iron and steel require a constant stream of lubricant. The beds are therefore of the tank form, from which the lubricant can be drawn off and utilised again. When a succession of operations is being done on small pieces of metal there is no time for the heat to get away, as in ordinary lathe work, in which changes have to be made in tools.

The question whether dies shall lead themselves over the

screw being cut, or whether they shall be led by an external agency, which is a matter of little importance in short screws, becomes serious in long ones, because it is practically impossible to cut long ones in this way and produce an accurate pitch. To a great extent this is a question of the degree of keenness of the cutting edges. Dies that are allowed to become dull squeeze as much as they cut, and the result is that the bar over which they are drawn is compressed, and the metal extended, and on a moderate length only, the pitch, if measured, will be found in excess of what it ought to be.

The majority of screws cut on automatic and semi-automatic lathes being of small size, and short, the usual method adopted is to bring the dies up to their work, and then leave them to be drawn over by their own lead. On a length anywhere up to 8 or 10 in. the results are sufficiently close, and most screws measure less than this in length. The results are therefore influenced by such matters as the thickness of dies, the degree of dulness at which they may be allowed to continue working, the nature of the stock being worked, whether hard or soft, and whether a thread shall be finished in one, or more than one traverse.

When a screw and its hole are not alike in pitch, due to the stretching of the thread, the evil is magnified the larger the number of threads that have to be engaged, so that though an inaccurate screw will not pass through a thick nut or plate, and bear in every thread, it will go through a thinner one. The thread is still inaccurate, but the want of truth is not noticeable in the contact of a few threads as it is in many, a fact which must be remembered when gauging screws for truth, and estimating their suitability for certain classes of work.

There is thus no practical objection to allowing dies to be drawn over threads by their own lead for screws of moderate length, fitting into shallow plates, and when no great weight is drawn along with the dies. But when the carriage is heavy, the die head alone should be drawn over. This is the function of the reversing die and tap holders which are drawn through their sockets, that are held fast in the turret. There is then nothing but the slight weight of the actual sockets to be led by the taps or dies. On the reversal of the work at the head, the socket runs back until free of the thread, when it is ready for cutting the next screw.

The dies used on screw machines are made either solid, or with inserted cutters or chasers. In examining any modern dies of either class, the cutting edges are seen to be very narrow. They approximate to the proportions of the chasers in the Whitworth screw stocks. The result is, that though control seems to be sacrificed, yet this is more than compensated for by the avidity with which the cutting is done, by which all threads except those which are very coarse can be cut, and finished at one traverse. The edges which are in contact with the work being very narrow, penetrate better, and with far less friction than those of the older class. And further, the screw machine is more favourable to the best action of these tools than the hand-operated tools, because the machine exercises a more perfect alignment than the hand. And permanence is further assured by the ample lubrication available.

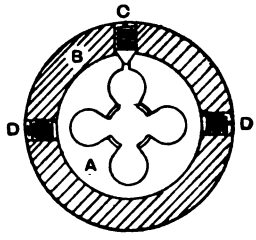

Fig. 370.

The smallest dies are usually made with three, or four cutting and guiding edges, and three, or four wide clearance spaces. Provision is made for adjustment for wear, and sizing, by enclosing the die in a collet, and fitting a screw or screws into this. The adjustment screw usually has a tapering end which fits between the tapered edges of the split portion of the die, and so permits of a sufficient amount of adjustment. Fig. 370 is a common type, which admits of very delicate adjustment for size. The die itself A is split through on one side, and is slipped into the collet B, the pointed grub screw entering the tapered opening. By turning the screw the die is opened out, thus permitting of the cutting of a thread of larger diameter. To make it cut smaller, the pointed screw is withdrawn a little, and the side screws D D turned in farther, causing the die to close in, the spring of the metal being sufficient to allow a small amount of latitude. Very fine shades of difference can be obtained in these dies, by manipulating the screws carefully.

In another form a tapered screw is fitted (Fig. 371) instead of a plain vee. In others screws are fitted in the faces, opening out the split dies in their collets. Two forms of dies of this kind are shown in Figs. 372 and 373, with the set screws by which they

are held in their collets. In the holder (Fig. 372) the die is made in halves. Screws with tapered heads are fitted, and by turning these in, the dies can be separated, while the outer clamping ring is used to close them in. Fig. 373 is somewhat

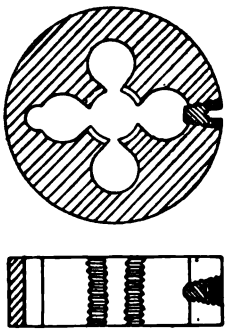

Fig. 371.

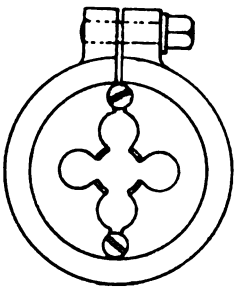

Fig. 372.

similar to the previous one. The dies are in halves, separated and controlled with screws, but the outer ring or collet is provided with four grub screws, the points of which enter recesses in the dies, exactly in line with the cutting parts. This ensures that each edge will do its proper share of the work.

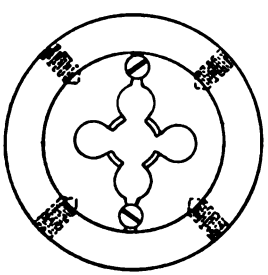

Fig. 373.

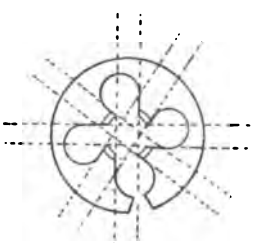

Fig. 374.

Although the cutting faces of the common dies in screw stocks are mostly radial, yet in those for screw machines a true cutting angle is often obtained by the construction shown in these figures. Fig. 374 shows a method of marking-out dies with a good cutting angle, narrow cutting portions, and plenty of clearance for chips,

which is so great an essential in screw machine work. The cutting faces and the faces at the back of the edge make an angle of 30° with each other. There is therefore no hard and fast rule for the cutting edges of these dies. They are seldom radial, like those of common dies, but generally formed by drilling clearance holes and making a slight flat, which construction brings them well in advance of the centre line. It seems as though this matter of cutting angle, so important in hand-screwing tools, is overshadowed by other matters, chief among which is the narrowness of the cutting edges, which permit of easy penetration with the minimum amount of grinding or squeezing action, the alignment of the machine tool, and the large volume of lubricant which is constantly flowing over the tools in automatics.

These small dies are cut with a tap of the same size as the screws which they have to cut, because the dies are not adjustable

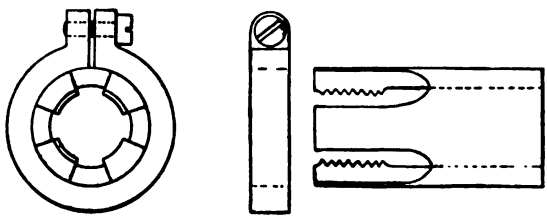

Fig. 375.

during cutting, as in hand-worked dies. Yet they yield good results by reason of the causes just named.

Sizing dies are used when fine results are required. Thus a thread which may be cut by a roughing die, or by a chaser set for a roughing cut, is finished by a sizing, or a finishing die, or by dies that are re-set after the roughing cut, for a finishing one. The latter, though not a device which can be adopted on automatics, is employed largely on semi-automatics, and gives results good enough for all ordinary run of engineers' work. But for purely automatic work the die must be either solid, or of the self-opening, and self-closing type. Of the first named—the solid—there are two broad designs, the one which we have been discussing, usually adopted for the smaller screws; the other for larger ones in which the dies are split longitudinally, and encircled by an adjustment ring, not a collet—hence these are termed

spring dies. Such methods admit of very minute and precise adjustments, and are in extensive use.

Fig. 375 is a very useful spring die, which affords plenty of room for the chips to escape, and is capable of fine adjustment

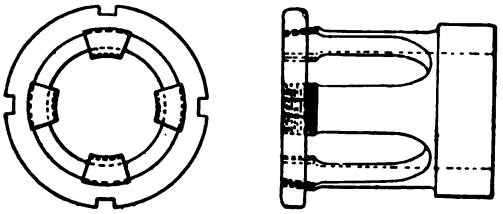

Fig. 376.

by means of the clamping ring. The type is not suited for heavy cutting, but for small sizes it works very well, and in the larger sizes is used as a finishing die. The sharpening is easily done with an emery wheel grinding the flat faces between the fluted spaces. Fig. 376 is an example of a larger size. The adjustment is by a ring fitting by a finely threaded screw to the horns of the split die, a device which is simple in action, and which will effect very fine graduations in size.

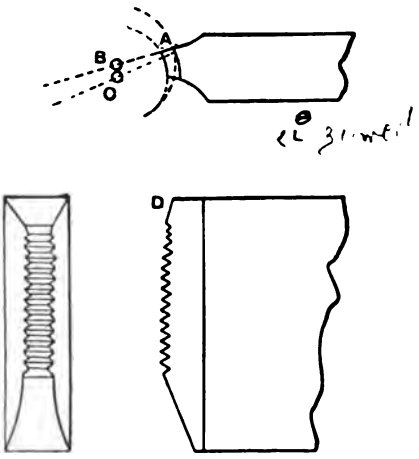

Fig. 377.

The larger screws are cut with chasers held in die boxes, of which there is a great variety. These are always made with narrow cutters and very wide spaces. For screws of large diameter and fine pitch, as on those for pipe fittings, the widths of the chasers are not increased, but their number is, still leaving large clearance spaces.

How the maximum capacity for cutting can be embodied in a high-class chaser is seen in Fig. 377. The cutting edge A is radial with the centre B of the work, but the backing off is done

from another centre C. Then the chasers are gradually led on by grinding away the teeth at the leading edge D. Three, four, or more such chasers cut freely without squeezing the metal.

Distortion due to hardening is an element that has to be reckoned with in making taps, dies, and hobs, since it produces inaccuracy. From this point of view, the shorter the tap, hob, or die, the fewer threads brought into action the better. The distortion is chiefly noticeable in long taps, but it is likely to be present in lesser degrees in the shortest ones. As chasers are commonly cut over hobs, any inaccuracy present in the hobs will be reproduced in the chasers, and thence in the threads cut when the chasers are drawn over the work by their own lead. From this aspect it is interesting to note that the chasers used on the Jones & Lamson flat turret lathe are made on a plan which dispenses with the usual method of cutting over a hob, which may be made inaccurate in hardening, or may possibly have been cut

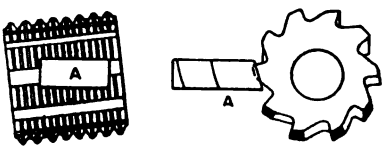

Fig. 378.

inaccurately by want of truth of the lead screw in the lathe in which it was made. The Jones & Lamson chasers are cut, not with a hob, but with a milling cutter having circular teeth, and set at an angle (Fig. 378), A being the chaser. To avoid possible error, the dies are hardened, and a trial screw cut with them and tested. If it is found to be inaccurate, the angle of the milling cutter is altered to the amount which seems desirable and another set of chasers made, each one singly, and another trial screw made. When angle and pitch are found to be correct, the precise particulars of setting are recorded as a guide for the cutting of all future chasers of the same angle and pitch. A special machine, with micrometer readings, is employed for this work. In this way errors which may be reproduced in the work from an inaccurate hob are eliminated, and the only residual chance of error is that done in hardening the chasers after cutting. And this is reduced to a minimum in two ways. First, by using the front

teeth only for cutting by; and second, by hardening the teeth alone. A very important result follows from the adoption of this plan. Emphasis has already been laid upon the difference between the cutting and the guiding action of screwing tools. In the chasers in question the cutting of these with a milling cutter set

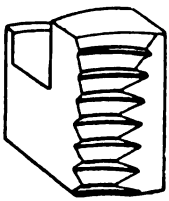

Fig. 379.

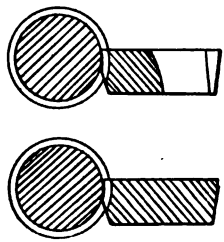

Fig. 380.

at an angle is seen in Fig. 378 to result in the leading action of the first threads dying off into guidance only in succeeding ones, which is further illustrated in the succeeding Figs. 379 and 380.

For cutting small screws the dies are generally of the solid split type, which we have illustrated. But their employment

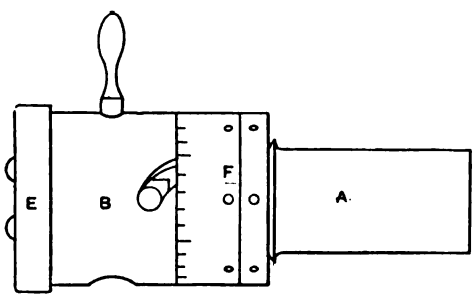

Fig. 381.

involves a reversal of the work for running them off the thread. In screws of medium and large sizes this is objectionable; hence these are more frequently cut with dies that open when the thread is cut, without reversal, a class that will be now considered.

There are numerous dies of this class in use, some of the principal of which are shown.

Opening dies may be roughly classed under two types: those in which the opening mechanism is actuated by an internal stud, and those in which the mechanism is external. Figs. 381 to 384 illustrate a die of the first kind—in external and face views in the first two figures, and in longitudinal section and in face view, with the cap removed in the two last figures. The main central portion of the head A is solid, and is surrounded at the front end with a solid shell B tapered on its internal front surface. The shell rotates to a limited extent on the central portion, and coerces the cutters C by means of the following device :—There is a crosshead D within the chuck, the ends of which pass through longitudinal slots in the body, and through helical slots in the outer shell (compare with Fig. 381), fitting the slot by a friction roller. An adjustable stop screw *a* in the centre of the crosshead is set to suit the length of the thread to be cut. When the work strikes the stop, the crosshead is thrust backwards, with the result that the outer shell is revolved through the action of the helical slots, and the cutters fly back from the thread under

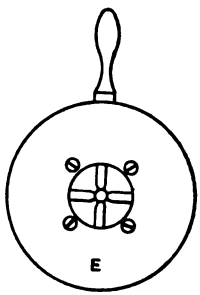

Fig. 382.

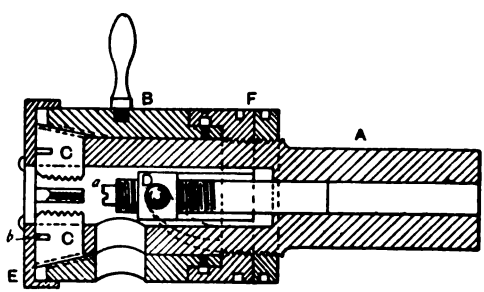

Fig. 383.

the pull of a circular spring *b* which fits into a groove in the front of each cutter.

The four cutters slide in radial slots in the central piece (Figs. 383 and 384), and are coerced by the conical surfaces that are recessed in the front of the outer shell B (Fig. 383). They are held in place by the circular cap E which fits against their faces

and over the outer shell, and which is fastened by four screws to the central piece (Figs. 382 and 383). Adjustment of the die for size is effected by a nut F behind the shell, the edge of which is graduated. The die is closed either by the handle or automatically by a pin which is struck when the turret revolves.

Figs. 385 and 386 illustrate an opening die of the central pin type, by the

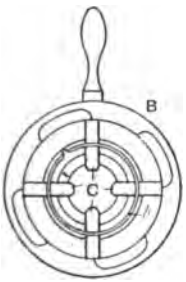

Fig. 384.

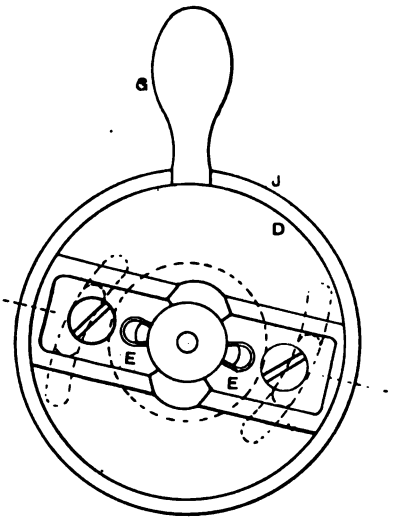

Fig. 385.

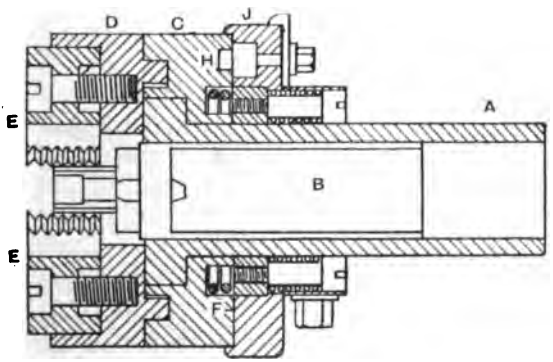

Fig. 386.

Geometric Drill Company. A is the shank that fits into one of the holes in the turret, and B is a gauge pin sliding within it, and capable of endlong adjustment to give the exact length of screw

required. When the screw which is being cut strikes the end, it pushes B backwards, and causes the dies to fly open by the action of the following mechanism :—

The front of the head C which is connected with the shank is furnished with two cross slides D, D, into which the dies E, E, are fitted. Lugs on the back of the slides fit into the eccentric slots in C (compare with the front view, Fig. 385). Evidently if C is turned through a portion of a revolution in one direction, the effect will be to close the dies; if in the other, to open them. Now a spring F, coiled in a recess at the back of C and attached to it, has sufficient strength to turn C round far enough to open the dies. They are closed by moving the handle G, and locked by dropping the pin H into a shallow slot in the back of C. As

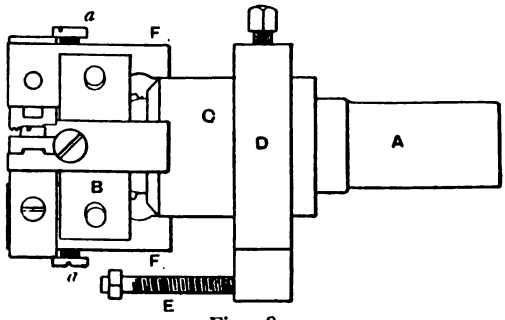

Fig. 387.

soon as the end of a screw strikes the end of the gauge pin B, the latter is pushed back, and as it is connected to the back plate J by means of screws in the hub of C, run in from the outside, the result is that the pin H is instantly knocked back, releasing C, which then flies round, responsive to the action of the spring F, so opening the dies. Screws, therefore, can be cut up to a shoulder. The gauge B is set for length by one screw in the hub of C. Long screws can be cut by removing the gauge. The head is graduated for diameters either in hundreds or sixty-fourths of an inch, and to permit of this adjustment the pin H lies in a circular slot in the plate J, of sufficient length to permit of necessary adjustments. The die can be closed automatically by screwing a pin into a threaded hole opposite the handle, and attaching a tapered piece to the machine to engage with the pin.

Illustrations of Tucker's opening die, in which the striking mechanism is external, are given in Figs. 387 to 391, comprising an external view (Fig. 387) and various sections in succeeding ones. The mechanism is as follows :—

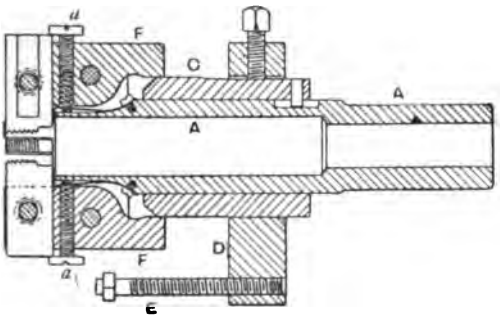

Fig. 388.

A is the die body, which is gripped in the turret by the stem at the right-hand end (Figs. 387 to 389), the hole through A being left for the passage of long screws, when such have to be cut. The body carries at one end a flange B, a tube C that actuates the

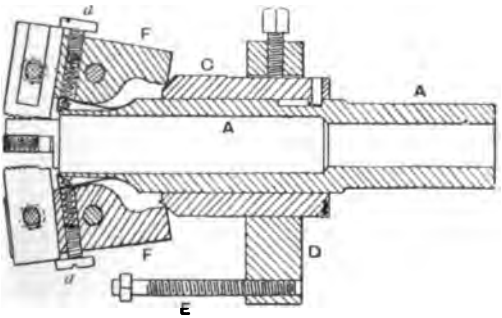

Fig. 389.

chasers, and a ring D that carries the stop pin E. When E strikes against an abutment on the machine, C is thrust back, releasing the pivoted die holders F, which are thrown off the work by springs in the following manner :—

The flange B (Figs. 387 and 390) is a ring with four slots into

which the chaser holders or carriers fit, and in which they are each pivoted by a pin. The chasers are carried in their holders

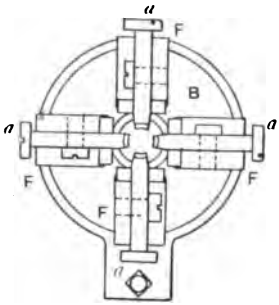

Fig. 390.

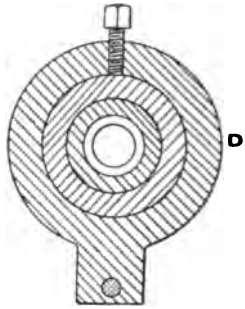

Fig. 391.

by grooved faces seen in Fig. 387. The chaser is retained in its proper radial position with a binding screw seen in the same figure and in Figs. 388 to 390, and a limited power of movement is permitted by the slot hole. Adjustment is effected by the screw *a*, the underside of the head of which bears on the outer end of the chaser. The screw is tapped into the holder.

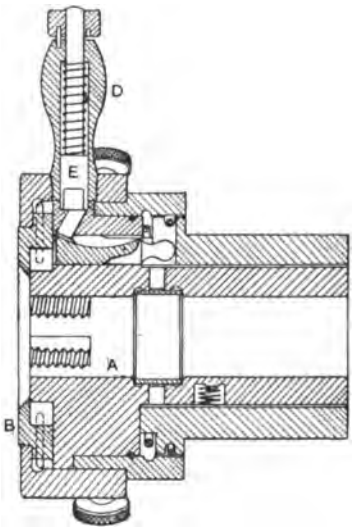

Fig. 392.

The ring D has provision for adjustment on the body A by means of a set pin in C entering into a slot of limited length in the body A. The ring D is also capable of adjustment along C by means of its set screw. When the dies are in operation, cutting, the ring C is forward, and its outer portion maintains the chasers close on the work, as in Fig. 388. When the thread is cut, the stop screw E strikes the abutment provided, the ring D and tube C are thrown back, and the

chasers slide down the bevelled end of C as they are thrown over on their pivots by the springs that press against the ends of the adjusting screws (Fig. 389). The backward and opening movements are restricted by the length of the slot into which the pin in the tube C enters. Guard leaf springs shown in Figs. 388 and 389 prevent dirt and cuttings getting into the body of the die.

The die holder of the Jones & Lamson lathe is shown in Figs. 392 to 395. These chasers, as mentioned on page 302, are not cut with a hob, but with a milling cutter set in such a relation to the chasers being cut that suitable clearances are imparted. The die head in which these cutters are used has a power of self-adjustment by virtue of which any slight want of alignment between the

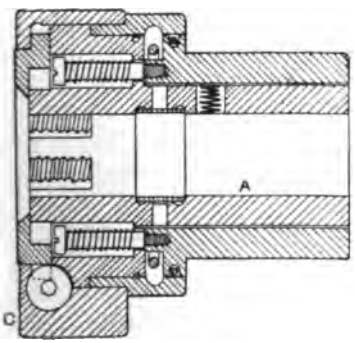

Fig. 393.

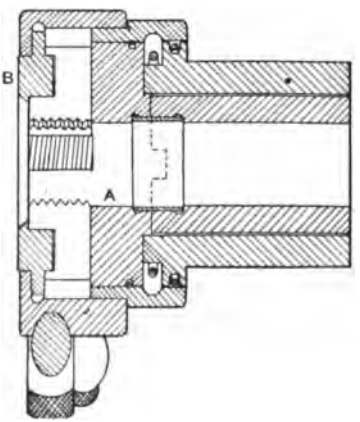

Fig. 394.

work and the tools is compensated for. It comprises the tool-holder or body, the cam ring, outer eccentric ring and handle, with spring stop pin, sizing screw, and shank.

The tool holder or body A has four slots for the reception of the chasers. They are moved inwards or outwards simultaneously by the cam plate B, which is moved by the outer eccentric ring C with its handle D. The handle is furnished with a stop pin E which can be drawn back and reset by the action of the spring and pin, one position corresponding with a roughing and the other with a finishing cut. The exact position of the chasers for any screw is fixed by the screw F, which has a ring tooth of rack section engaging with a tooth on the cam ring.

Fig. 396 shows an opening die with internal striking mechanism. The shank A fits the turret, and is screwed to the body B. The dies C are fastened to the pivoted levers D with screws in the manner shown, the front screw entering through a slot hole to provide adjustment. The tapered end of the sleeve E keeps

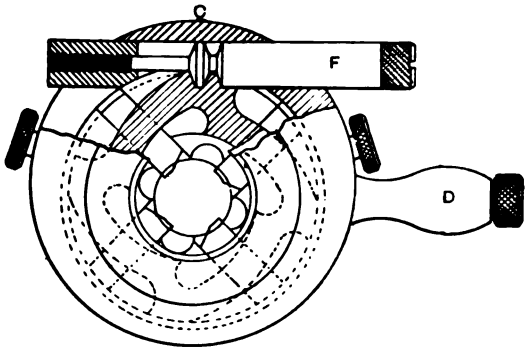

Fig. 395.

the dies down on the work when cutting. It is thrown back by the end of the work striking the screw F, which goes through the crosshead G that moves in a slot in B. The forward movement of B is limited by the screwed stud H.

In the Herbert machines the opening dies are carried in a

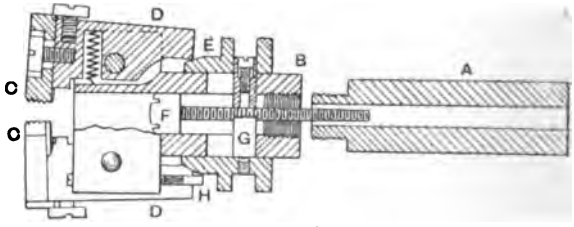

Fig. 396.

manner that permits of a trifle of endlong movement to the die holder, so that threads of accurate pitch can be cut independently of perfect accuracy in the setting of the cam, and which also permits of the cutting of threads of different pitches without alteration of the cam. The attachment fits to the turret by one of its holes and pad bolt. A spring at the rear, a sliding feather,

and a key or handle which comes into contact with a trip block on the slide and closes the die ready for the next cut, are the essential mechanism employed.

We now take examples of pieces of work done on automatic screw machines, in which the tool types already described will be shown in operation. These examples are taken from the practice of Alfred Herbert Limited.

Fig. 397 shows a piece to be tooled, a Hotchkiss percussion fuse base. Note that the piece has a dovetailed recess at the bottom of the hole, and that the collar is undercut on the face, both of which present difficulties. Internal and external threads have to be cut. To make these pieces on a common lathe would be an awkward job, especially bearing in mind that they must be to gauged dimensions. It would mean settings of the slide rest to two separate angles for the bevelling of the outside collar, and of the undercutting of its inner face —that is, supposing special tools were not made to these angles. Also that a special tool would have to be made to bore out the dovetail recess, and traversed out on the rest to an exact diameter, using a stop or else some tentative means of measurement. We know what these things involve in lathe work. Then the screws, internal and external, must be cut, either with change wheel trains, involving two gearings up, or else by dies and tap. I doubt if a smart man could turn out, finished to fine dimensions, more than one per hour of these, using a common lathe, after the tools were made and fixed, and using any aids available from temporary stops and templets. These pieces are done in three minutes fifty seconds each by the devices shown.

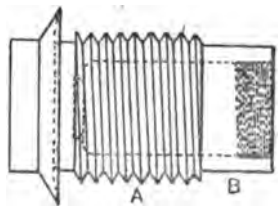

Fig. 397.

The general relations of the turret and cross slide are shown in the illustrations, in which Fig. 398 is the turret with its tools in plan, Fig. 399 the cross slide and its tools in elevation, and Fig. 400 the same in plan.

The turret is seen in that position in which the first operation is about to commence. The box tool carries two turning tools A, A, for turning the outside to two different diameters, corresponding with the screw points and the front end. Simultaneously the

drill B roughs out the hole. The tools A, A, and their method of setting resemble those illustrated on page 288. They are made of plain bar, ground to angles of top and front rake, are pinched by the nut J and its clamping plate, and adjusted radially by the set screws K, K. The front tool cuts the portion A of the percussion base (Fig. 397), and the hinder one cuts B, the work of both terminating simultaneously, and reducing A and B to size at once.

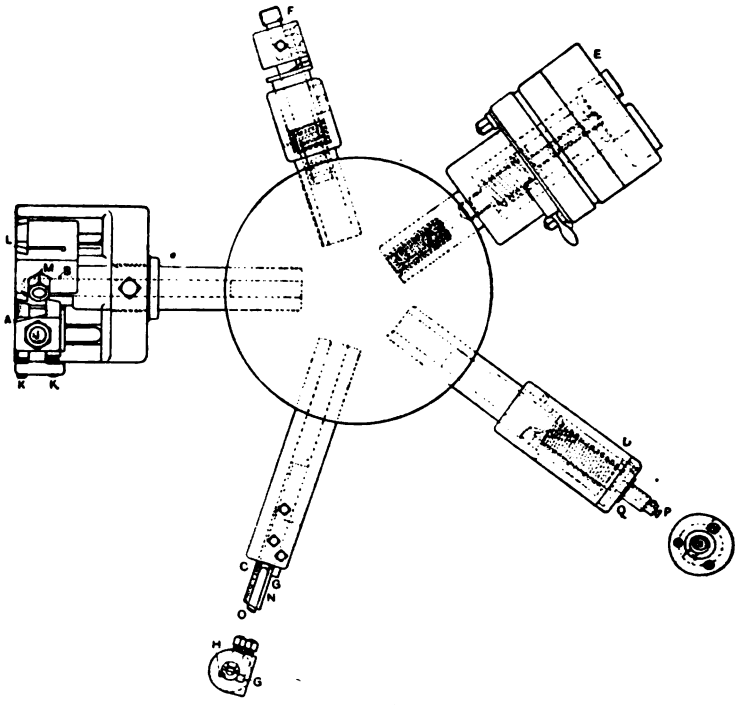

Fig. 398.

Vee guides L in the box tool support the work against the stress of cutting, being pinched by the bolt M. The tool head is screwed to its pin or stem, coming up against a shoulder, and the stem is held in the hole in the turret. The stem is made hollow to receive the fluted drill B, which is adjusted for length and secured with a set screw. It will be noted that a reasonable amount of endlong adjustment for the tools A, A, vee guides L, and drill B is

obtainable in the box head to suit different jobs, and that the pin or stem can also be radially adjusted in the turret if necessary.

In the second operation the tool C comes round. This is a combination tool: a D-bit N reams the hole just drilled; at the same time the recess at the bottom is roughed out by the tool O, then the end of the fuse base is faced by the cutter G—three distinct operations performed by the compound tool, which is of the oil tube type, the oil coming through the passage H. Each of these tools is separately adjustable by means of its set screw—seen in plan and end view—in the socket fitting in the turret.

The dovetailed recess at the bottom of the base is cut next with a very ingenious tool shown at P, which works on the spiral,

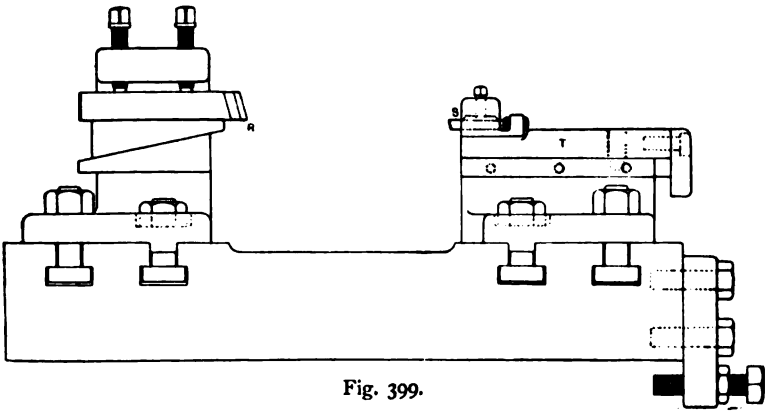

Fig. 399.

or pencil-case principle. The tool is seen to comprise the stem which enters the socket of the turret, a socket adjustable lengthwise on the stem to suit holes of various depths, a combined tool shank and holder with a compression spring. The cutter P is set eccentrically in its shank. It has two movements: one forward, derived from the turret; and one of rotation, derived from a spiral groove in the tool shank, into which a screw that projects from the stem enters. The cutter P, of half-round shape, enters the recess in the fuse base under the forward movement of the turret, until the collar Q—which is fastened with screws to the socket of the tool holder—comes into contact with the end of the work. This prevents the collar from receiving any further end-long motion. But the shank of the tool holder within still

advances, and is rotated by means of the cam groove, in which the screw connected with the socket enters. As the tool is mounted eccentrically on the shank the cutter is compelled to move radially from the centre and cut the recess to the proper diameter.

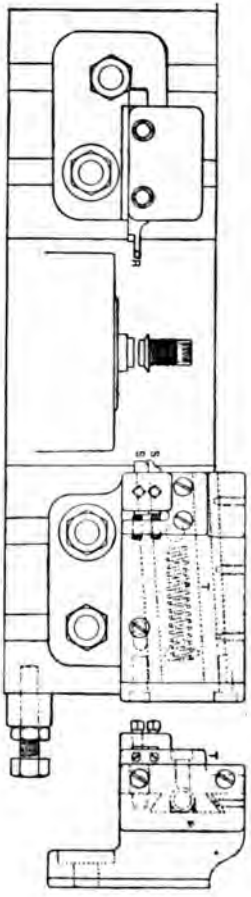

Fig. 400.

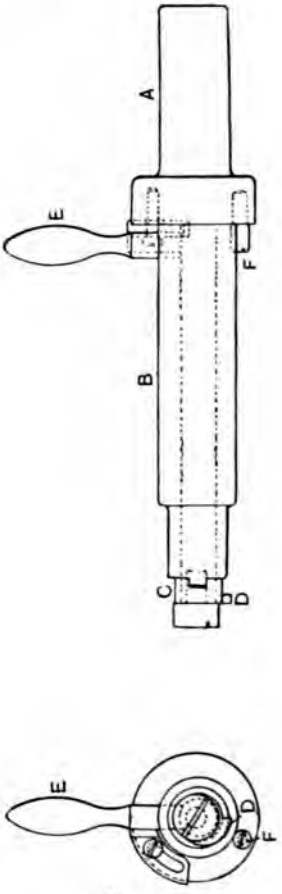

Fig. 401.

The outside thread is screwed in another operation by the opening die E.

The sixth operation, and the last done from the turret, is that

of cutting the internal thread with the tap F, which is secured in a holder. On reaching the proper depth, the spindle reverses, and pressure on the tap is released, allowing it to run back, and out.

In the seventh operation, that of dishing the inside of the collar, the cross slide (Figs. 399 and 400) comes into play. This is fitted with an auxiliary slide T, which is set at a slight angle, and corresponds with that of the undercutting of the collar. This carries two tools S, S, which form the head and dish the collar. The tool to the left hand performs the first-named operation, that to the right the second. There are two cutting facets to the first, and three to the second, finishing those portions of the fuse base correctly to shape and size at once. The tools are adjusted and pinched by their own separate set screws. The angle tool slide has its setting-up strip, and the entire fixture is bolted down to the tee grooves on the front of the cross slide. It is worked by an independent lever from the cam disc.

Lastly, the work is separated by the cut-off tool R on the back of the cross slide, seen at the rear of Figs. 399 and 400, carried in one of the double-wedge holders bolted to the main slide.

This piece of work is therefore done within four minutes in eight operations, involving the use of twelve distinct tools.

In this connection an illustration of a recessing tool (Fig. 401) of Alfred Herbert Limited, which is used on one of the chasing saddle lathes, is of interest as showing the hand-operated tool in contrast with its later development, the automatic one P (Fig. 398).

In Fig. 401 the eccentric movement by which the cutting tool is thrown outward to the proper radius is imparted by a handle. The tool body comprises a shank A of mild steel fitting into one of the holes in the turret, and sleeve B, within which a pin or stem fits closely and freely. At the end of the stem a sleeve C, mounted eccentrically, is in one with the cutter D. The eccentric movement is given by the handle E, the arc of movement of which is arrested by a stop peg F. As the sleeve is rather long, vibration of the cutter is prevented by a pilot pin or steady, which enters into a hole previously drilled in the fuse body. It also serves to keep the cutter on its spindle. After the recess is cut the tool is drawn back by the hand, and withdrawn through the smaller bore in front. All this hand movement has of course

to be eliminated in the automatic, and this is done in the ingenious manner with the spiral just described.

It is in such ingeniously contrived tools that the modern methods of working show to such advantage beside the common ones. Recesses and undercut bevelled faces are always troublesome details to the ordinary turner, chiefly by reason of the difficulty of making and setting the tools, and of seeing and measuring the work during progress. The automatics and the turret lathes with their stops and special tools take charge of these details, and produce numerous pieces exactly alike without skilled attendance. It is therefore a job for the designer and toolmaker, who are, of course, trained and used to this work, and the actual attendant on the machines is not supposed to meddle with the tool at all.

The next group of figures illustrate tools used in the No. 3 automatic screw machine of Alfred Herbert Limited for producing the valve, shown separately in Fig. 402, of pneumatic hammers. The two principal features here are the extremely thin metal, necessary in order to reduce the weight, and the recessing of the internal portion. The turret tools and arrangements are shown in Fig. 403, and the cross slide in Fig. 404.

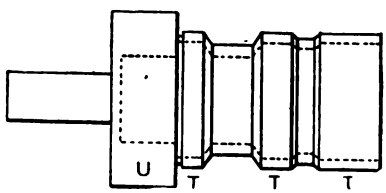

Fig. 402.

The first operation is that of centring and facing the end of the rod with the tools in the box shown at A. The centring tool R held with a set screw comes up first, followed by the facer S, a plain bit of bevelled steel held also with a set screw. The second operation is that of drilling and rough-turning, performed by the tools in the holder B. The plain drill is seen at M, and the turning tools at N O, with their fixing and adjusting screws; and the vee guides at P. The construction of the box is similar to that shown in the last example. The drill roughs out a plain hole nearly to the size of the smallest diameter of the recess in the valve, while the tools N and O rough-turn the portions T, U, of the outside of the valve.

The next operation is very similar, though not quite identical.

The box tool C carries a reamer Q, which enlarges the recess and partly shoulders it at the mouth, and also finishes it at the bottom end, while the tools H and J finish the outside portions T and U.

In the fourth operation the front tool holder of the cross slide

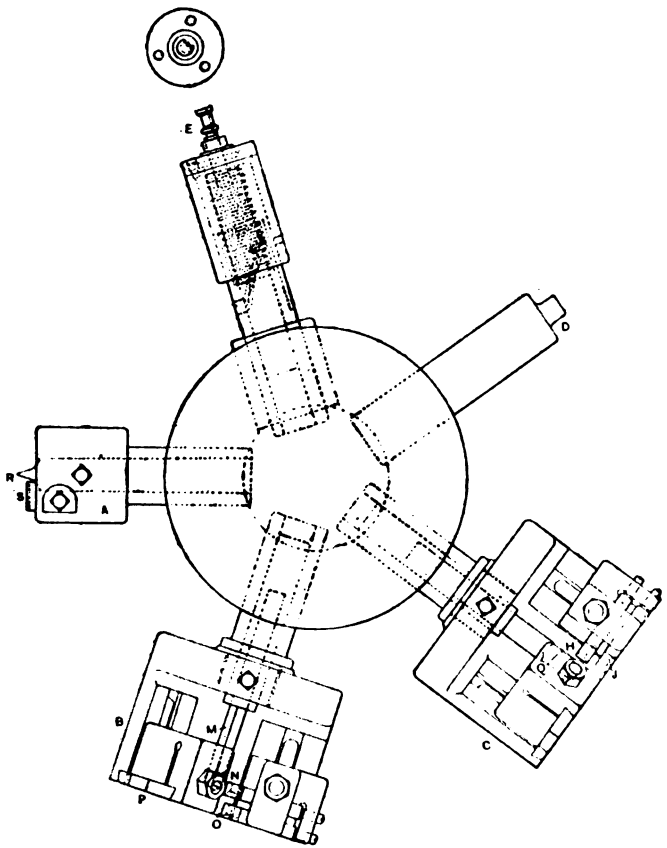

Fig. 403.

comes into play, forming the recessed outer portions of the valve, which could not be done with the tools in B and C. Four tool points operate simultaneously; these are seen in plan at F in Fig. 404, each separately adjusted, and gripped by its set screw. The relations of each to the valve are obvious, comprising three

recesses between the portions T and a deep shoulder at K. As the stress of cutting these surfaces simultaneously is severe, the valve is steadied the while by the pin D brought round in the turret and fitting the front portion of the bored hole.

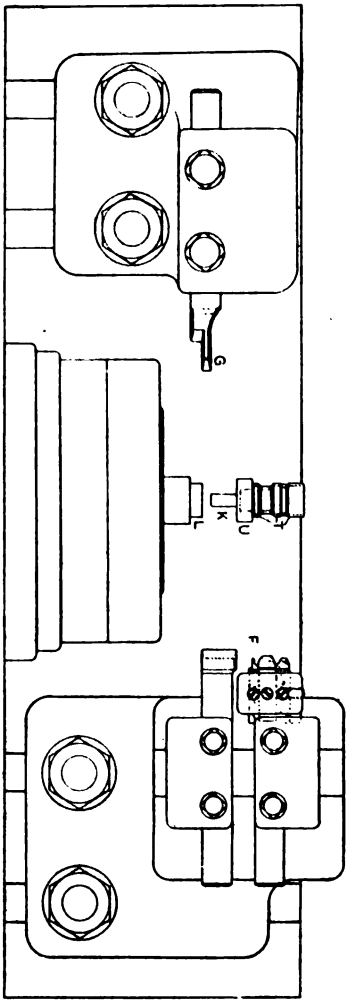

Fig. 404.

The fifth operation is specially interesting, being an application of the same device which we illustrated on page 312 for the work of recessing. A forming tool shown at E, turned to the same profile as the interior of the hole, and notched to form a cutting edge, is set eccentrically in its holder. It is thrust forward into the hole until its further motion is arrested by the collar of the holder, and then the action of the spiral or cam and its pin causes the tool to rotate, and the rotation is the means of throwing it out eccentrically, so feeding the profiled cutting edge into the work.

The sixth and final operation is the cutting-off of the finished piece with the tool G (Fig. 404) held in the hinder box of the cross slide, which also starts the shoulder for the next piece at L.

In these, as in other examples, note should be taken of the forms of the tools used. None of them are forged. Most are made from a bit of rectangular bar, ground at the front end to give an angle of bottom clearance on leading and following

edges. S, N, O, H, F, and G are all examples of this kind. They are in reality scraping tools—that is, they have no top rake; but they nevertheless cut with ease, the reason being that they are well supported and well lubricated. It is not that their duties are light either. On the contrary, they reduce at once on plain bar from the largest to the smallest dimensions, instead of nibbling at the surfaces of pieces of work that are forged or cast nearly to size. The circular tool E also is a scraping tool only, notwithstanding that it operates over its total width at once, imparting the profile form to the interior of the steel valve in a single cut.

The turret lathes and screw machines are thus solving problems that have been long associated with tool points *versus* solid tools. We have here tool points, but instead of bar holders modelled in regard to proportion on the shanks of solid tools, the holders are very stiff boxes held in the turret by round shanks that permit very little chance of spring. The small sizes of these tool points contrast strongly with the mass of their holders, a feature which is paralleled by the tiny milling cutter gripped in a massive spindle, and with the same object—namely, to eliminate spring and chatter. Again, tool points in bar holders are open to objection on the ground of the rapid heating when heavy cutting is attempted, since the holder does not carry away the heat as readily as the shank of a solid tool does. But here this matter is taken charge of by the oil pipes and spreaders that force the lubricant under pressure over the area of the work that is being subjected to the action of the cutting tools, as well as all over the tools themselves.

The work of the toolroom is much simplified by the employment of these tiny tool points. Instead of forging, reforging, and re-tempering cranked tools, the plain bits of steel are cut off and ground while presented in a machine at the proper angle. Little storage room is required, and boxes of tools can be made up readily for various pieces of work, using tools from stock, and adjusting them by means of the screws provided in the boxes. A good quality of steel can be employed, because the weight is small, and once tempered, they are good for long service without ever drawing the temper again.

These tools retain their capacity often during several days, or even weeks in some cases, without regrinding or re-setting. This is of course due largely to the perfect lubrication. But something is due to the fact that the cutting edges are not too thin. We

know that cranked tools having a regulation amount of top rake are very liable to chatter and dig in when operating on crystalline metals, and this is not conducive to long service, and the remedy is to reduce the top rake, or to reduce the feed. But in these plain tools, which are of a type that were used only for light finishing of surfaces in the pre-turret days, we have both the slogging and the finishing tools of the future for repetition work. Of course the vee'd steady is a very important feature, supporting the work in opposition to the tools. But the same device exists in lathes using common tools. If a better system of lubrication were adopted

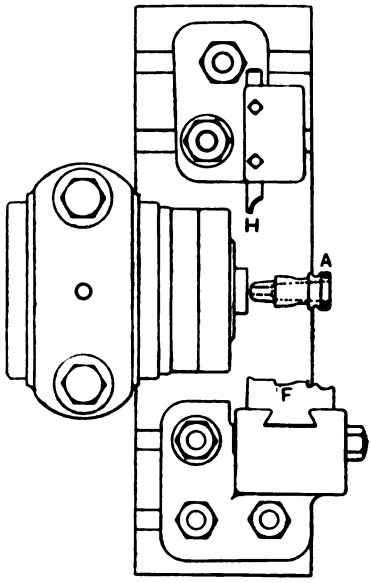

Fig. 405.

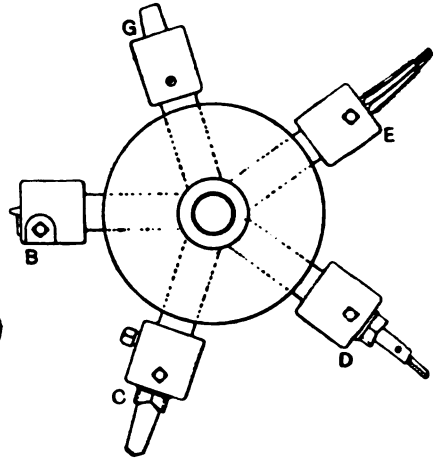

Fig. 406.

for the common lathes, the tool holder and plain tool points might have a new lease of life in these. But apart from that, the simplicity of the turret details—simple when resolved into their elements and taken separately—will cause the turret lathes and automatics to invade the functions of nearly all lathes save the heaviest.

The outline illustrations in Figs. 405 and 406 show the production of whirls from steel bar, the article itself being seen at A as though finished.

The first operation is to centre and face the end of the bar with a box tool B. The second is to rough drill the larger hole of the two, and rough bore the recess in the front of the whirl with the tools in the box C. In the third the small hole is drilled with the loose drill in the box D; at the same time the recess in front is finished. The taper holes are finished in the fourth

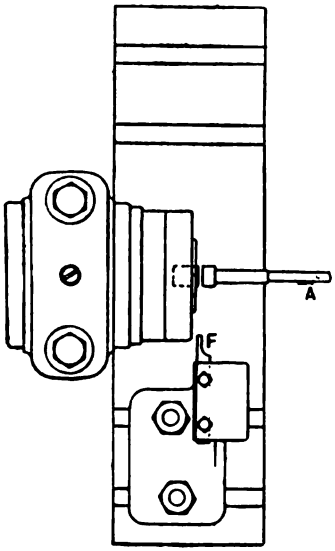

Fig. 407.

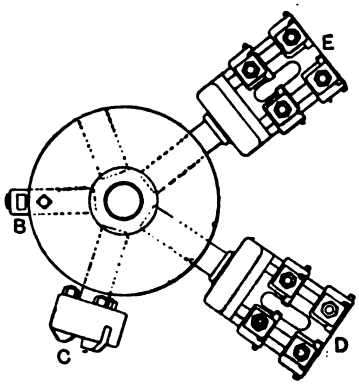

Fig. 408.

operation with a special shouldered reamer in the box E, so finishing all but the exterior. This is next shaped at once by a broad forming tool F in the front holder of the cross slide, the whirl being steadied against the pressure by the steady G in the turret. Finally the tool H on the back holder of the cross slide cuts off the finished piece.

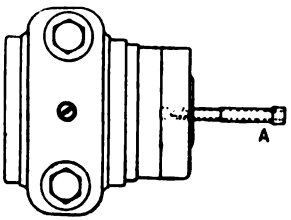

Fig. 409.

The production of sleeves A (Figs. 407 to 410), for cotton machine spindles, is shown in two series of operations, the views illustrating a piece of work that has to be chucked, and rechucked. In Fig. 408 the piece of bar is set by the tool B. C comes round and starts the work by chamfering the front edge to prepare the way for the two turning tools in the holder D,

followed by similar tools for finishing in the box E—completing the two longer portions of the sleeve, leaving the collar end to be finished in the second series of operations. The fifth operation is cutting off, performed by the tool F on the front cross slide.

In the second series of operations the spindle or sleeve is reversed and rechucked (Figs. 409 and 410) by the chucking pin G, and centred and faced by the tools in the box H. The larger hole in then drilled with the long fluted drill J. The box K next comes round and drills the smaller hole at the farther end of the

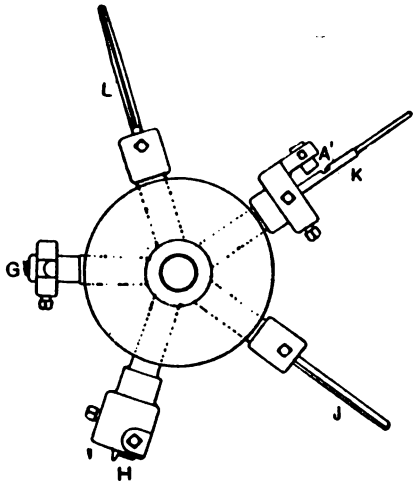

Fig. 410.

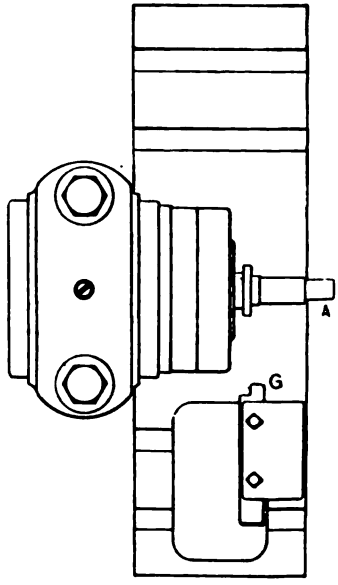

Fig. 411.

spindle. At the same time a cutter A^1 turns the large end of the spindle. Finally the reamer in L finishes the entire hole.

Bolsters for cotton machinery are produced from cored castings, as shown in the illustrations (Figs. 411 to 414). This is also chuck work, the bolster A being formed in two series of operations. In the first one (Figs. 411 and 412) the length of metal is pushed into the chuck by the pin B, and the operation is started by chamfering the ends with the tools in C. The two tools in D rough turn the longer portions, which those in E finish. F

screws these portions; the forming tool G turns the large collar, shoulders down one of its faces, and turns the small collar next it. The pieces are now ejected ready for rechucking.

The chucking tool H now rechucks the piece A for the second series of operations (Figs. 413 and 414); the tools in the box J centre and face the end. A fluted drill K rough bores the hole and forms the recess in the front shoulder with the tools seen at

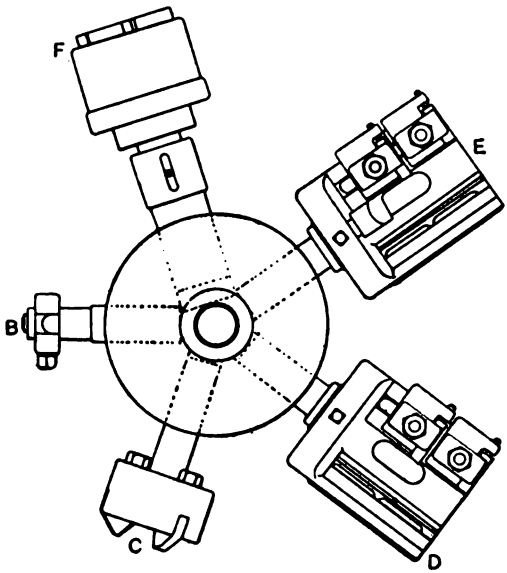

Fig. 412.

L, the same parts being finished by the reamer and tools in the box M.

The next illustrations show the tools for producing the crank-pin (Fig. 415) for a reaping machine, as designed and set up by Messrs Alfred Herbert Limited, on their No. 4 automatic screw machine. It is a remarkable design, illustrating excellently the development of the box tool from a simple tool holder with steady to a piece of mechanism as elaborate as a slide rest; for this tool is fitted with two slides, longitudinal and cross, with an automatic trip for arresting the depth of cut at a

predetermined stage. To have to make such a tool with the perfect fitting necessary to ensure its acting with precision and efficiency would alarm some shop managers, but the end justifies the expense when numbers are wanted.

The pin in Fig. 415 is a difficult piece of work to produce cheaply, because of the recessing in the head, which is tapered inwards to a smaller diameter than the body of the bolt. The bellied form offers no special difficulty, since that is shaped at once with the forming tool A on the cross slide seen in plan in Fig. 416, and in elevation in Fig. 417. The same slide carries a necking tool B (shown separately in detail in its holder in Fig. 418) which shoulders down for the end of the screw that is threaded with a die head of a type previously illustrated. The cross slide also carries a parting-off tool C. These details explain themselves, so we give attention to the special box tool by which the recess in Fig. 415 is formed. This is illustrated in plan in Fig. 419, in side elevation in Fig. 420, in end view in Fig. 421, and in detail in subsequent figures.

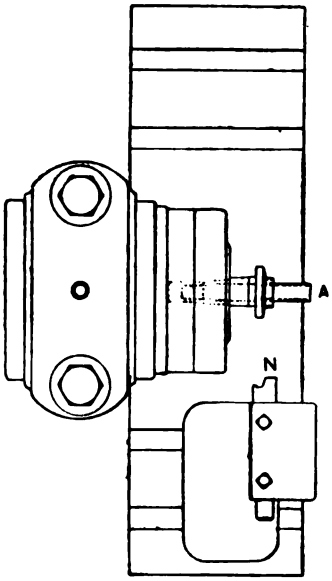

Fig. 413.

The action of the box tool is as follows:—The proper depth and diameter of the recess in Fig. 415 are safeguarded by adjustable stops—one for diameter on the cross slide, and one for depth. The mechanism, complicated though it appears, does nothing else than operate the little tool A for depth and diameter (Figs. 419 to 421, and shown separately in Fig. 422).

Tracing out the details of this tool, the box B (shown separately in Figs. 423 and 424 in side and end view respectively) is screwed in the boss to receive its shank. A longitudinal slide C fits by vees and gib with setting-up screws into B. Its function is to give longitudinal movement to the tool A which is carried on a cross slide D.

The cross slide is set to give the tool A its proper diameter of cut (the diameter A in Fig. 415) by the adjustable screw A^2, and entering the hole in the slide. A trip block B^1 (Fig. 420) is adjustable by means of the screw C^1, so that the longitudinal slide

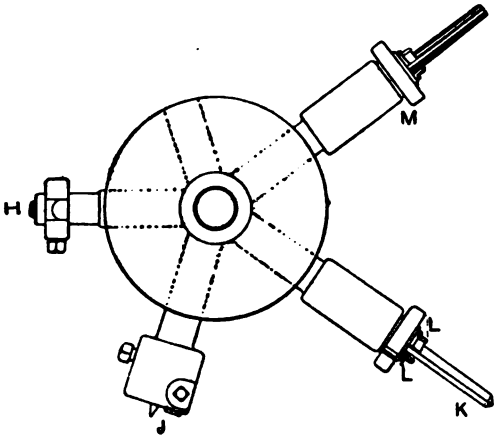

Fig. 414.

C becomes automatically unlocked when the depth of the recess B in the bolt (Fig. 415) is reached. This is effected by the block B^1 striking the work and releasing the pawl D^1. The screw E^1 adjusts the cross slide cam block F^1. This adjustment brings

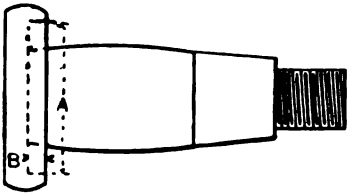

Fig. 415.

it closer to or farther from the cam rod G^1, which is pinched in the longitudinal slide with a grub screw H^1. The ends of the block K^1 and the rod G^1 are both bevelled to an angle of 30°. The transverse movement of the cross slide is imparted by the sliding of the bevelled edges of the rod fastened to the holder,

and the block fastened to the tool slide by its lug. The screw J^1 is set so that as soon as the pawl is released it forms a dead stop for tripping the block B^1. K^1 is the pawl stop.

This tool is a striking and almost unique example of the tendency of automatic work. When some of us were lads, the possibility of such an advance on the work of the lathe would have been derided. It is really a machine tool grafted on to another machine tool. It is built up of forty-three pieces, fitting

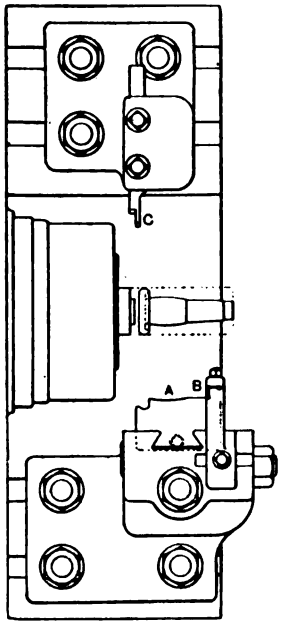

Fig. 416.

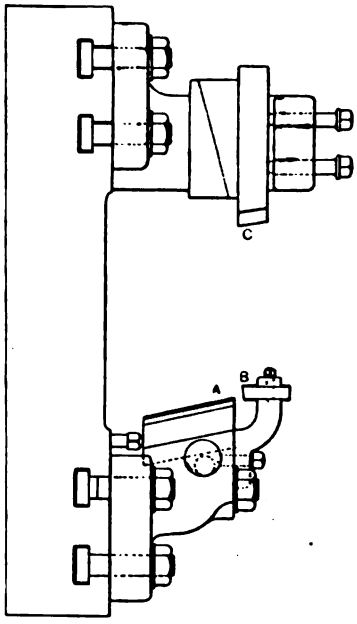

Fig. 417.

within very fine limits, with many parts hardened, ground, and reamed. Yet it pays to make it.

A good example of turret work, designed and carried out successfully by this firm, is illustrated in succeeding figures—selections from the more special tools being given. The work is that of producing 165 mm. armour-piercing shells, and soft caps for the same, on the No. 16 combination turret lathe of this firm. A quantity of shells are treated in the first set of

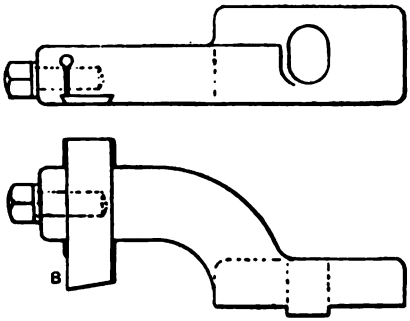

Fig. 418.

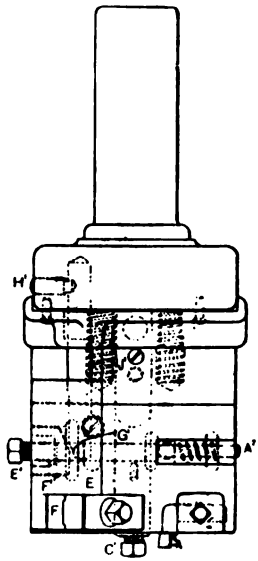

Fig. 419.

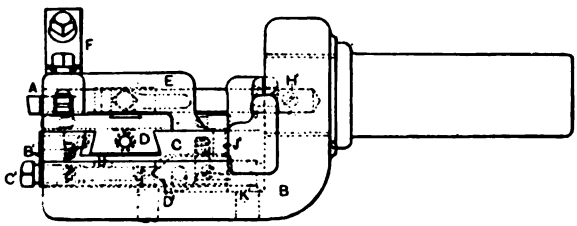

Fig. 420.

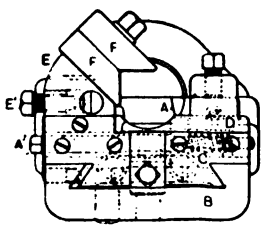

Fig. 421.

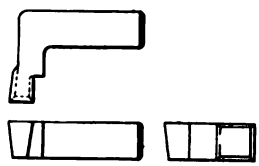

Fig. 422.

operations, as follows, before being turned end for end, for the second set of operations.

The first thing is to grip the shell in a bell chuck (Fig. 425), which is fitted to the lathe spindle. A bush A, a driving fit at the back of the chuck, steadies the nose of the shell, while the parallel portion is steadied with the screws B, hardened at the points. The tit on the outer end of the shell is removed with an ordinary parting tool, and the shell is centred with a pointed tool held in a split bush, packed with leather in the split, in a standard holder in the turret. The hole is then drilled with an oil supply drill, held in a split bush in a standard holder in the turret. At the same time the outside is rough turned as far as the bell chuck, with the tool (Fig. 426, A) held in the square turret, and then rough faced with the tool (Fig. 426, B), also in the

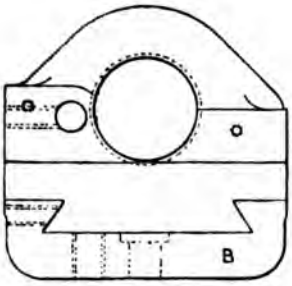

Fig. 423.

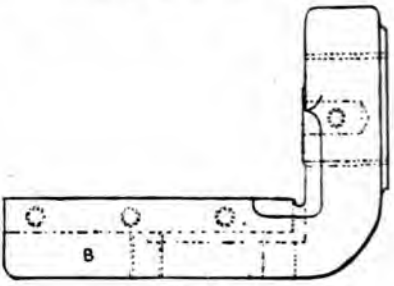

Fig. 424.

square turret, the tools being changed. The hole is next finish bored with the oil supply drill in Fig. 427 in a standard holder in the turret. Then the turning and facing are finished with the tool (Fig. 428), also held in the square turret, using the tool point A at one end of the square tool holder B, the other end being designed for another function—that of forming the recess in the chamber, which is done with the cutter C. All these cutters are of Armstrong-Whitworth steel. Cutter C, it will be noticed, is fitted into a recess near the end of the bar B, and is secured partly under the shoulder *a*, and partly by the clamp *b*, and is set outwards by the grub screw *c*. The end of the bar is rounded as shown in the end view, and a slit in the bar at *d* is made to facilitate the fitting and adjustment of the cutter.

The chamber is bored with the oil supply boring bar (Fig.

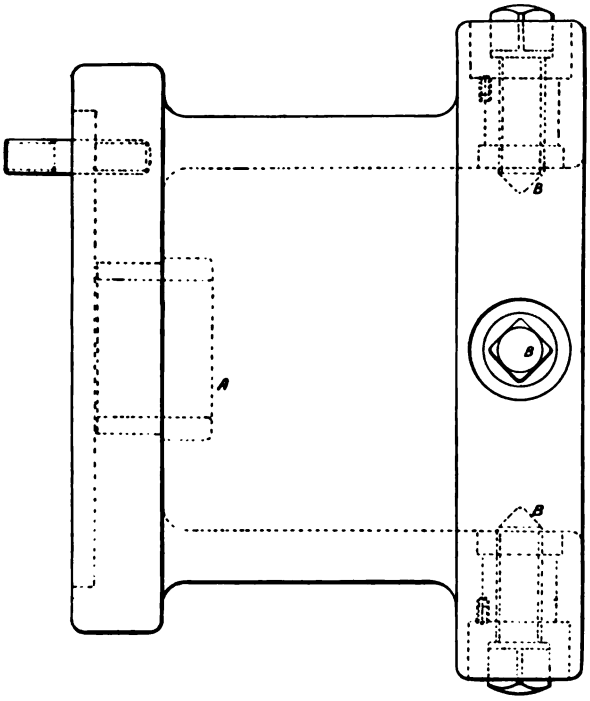

Fig. 425.

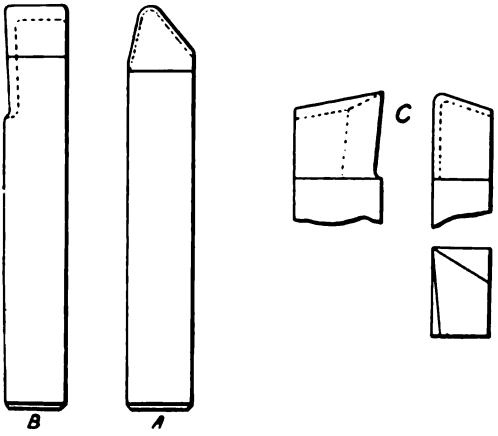

Fig. 426.

429). The right hand end of the bar is clamped in a hole in a bracket which is bolted to the former slide of the turret, using the

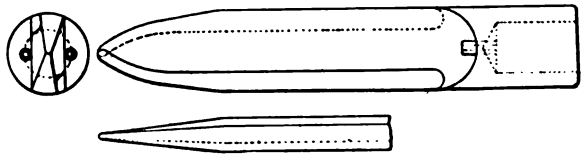

Fig. 427.

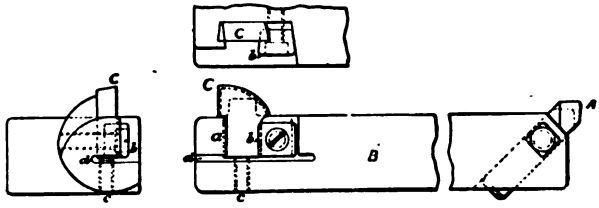

Fig. 428.

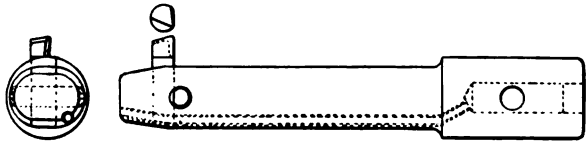

Fig. 429.

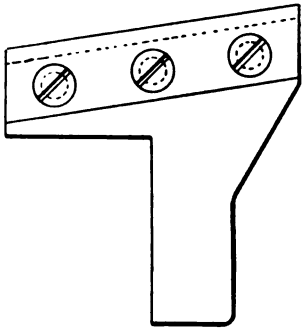

Fig. 430.

former (Fig. 430) on the square turret. The bore is next finished with the tool (Fig. 431), held by its body in a split bush in the standard holder on the turret. A radius tool is now put in the square turret for rounding the edge of the shell, the tool (Fig. 426, B) being removed, and this completes the first set of operations from one end, after which the shell is reversed end for end for the second set.

The turned body of the shell is clamped in the special chuck (Fig. 432) which fits, like Fig. 425, on the spindle nose of the lathe. The chuck is made in

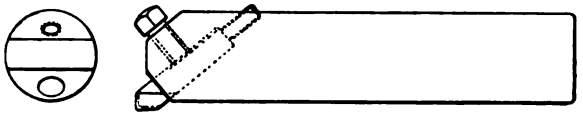

Fig. 431.

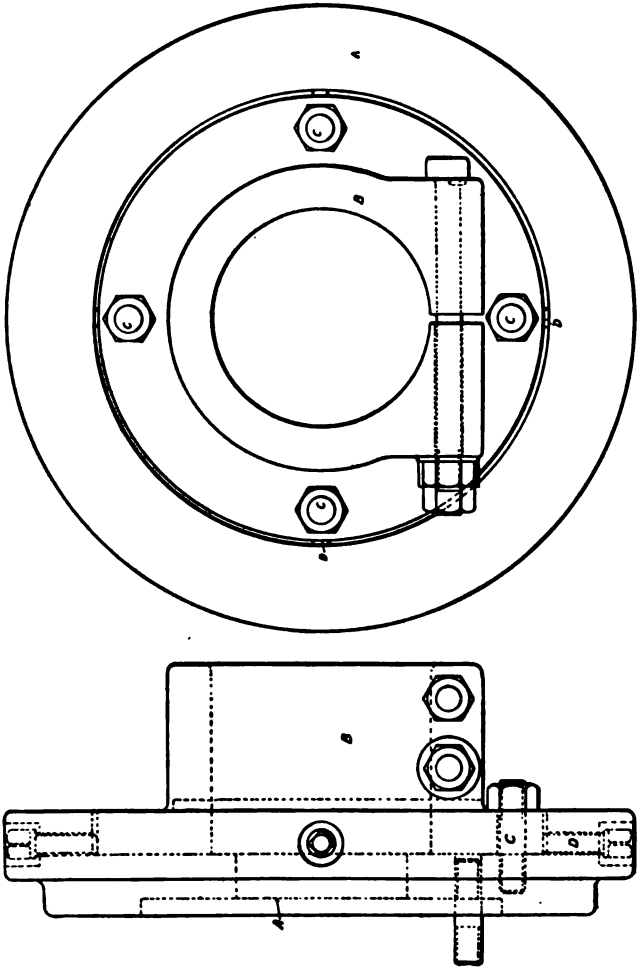

Fig. 432.

two parts, the back A attached to the flange of the spindle nose with studs, and the front B attached to A with studs C, screwed into A, but having clearing holes with $\frac{1}{8}$ in. play in B. This

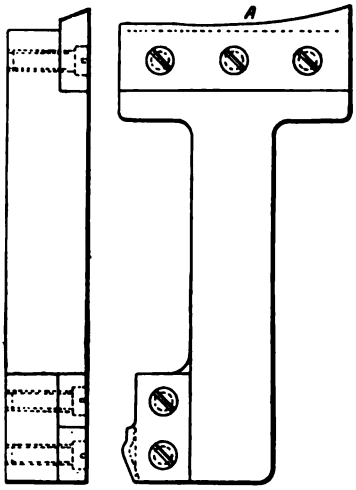

Fig. 433.

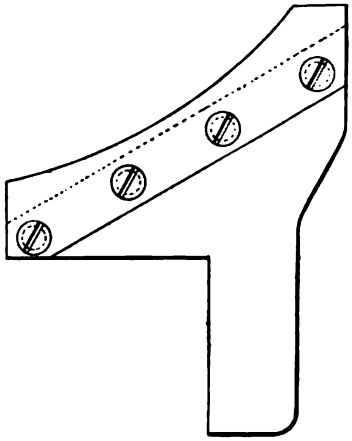

Fig. 434.

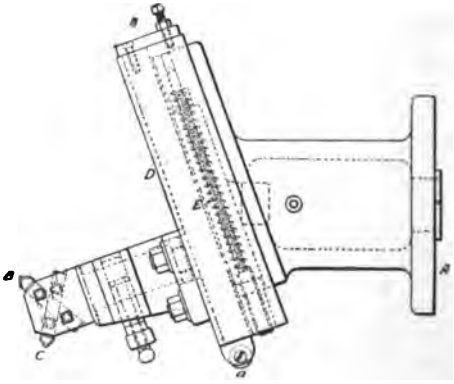

Fig. 435.

permits of exact centring of the work, by means of the set screws D, which are tapped into the flange of A.

After chucking, the tit is cut off with a parting tool, and then

the tool (Fig. 426, C) is inserted in the square turret, and the point, and the largest diameter of the shell rough turned. The tool (Fig. 433) in the square turret forms the largest diameter, and the recess, using the cutter A. The last operation is that of turning the radius of the point, using a tool in a special fixture on the turret, and a former in the square turret. The former is shown in Fig. 434, the tool in its holder with supporting bracket in Fig. 435. The face A of the bracket bolts on one of the flat faces of the turret, the roller *a* is pressed against the edge of the former plate, the tool B roughs and C finishes the curved profile. The tools are carried at the end of a stem clamped in a bracket bolted to the slide D, vee'd and gibbed to the main bracket A. The tool bracket or post can be adjusted along the slide with the tee-headed bolts. The thrust is taken against a compression spring E, 10 in. long, encircling a rod with an adjusting screw at one end. Each tool is held between two grub screws, and two set screws, as shown in the enlarged detail (Fig. 436).

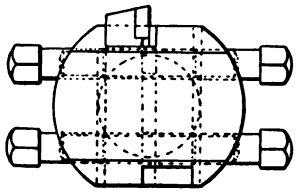

Fig. 436.

The following operations are employed for producing the shell caps. They are put in the bell chuck (Fig. 425), and set with a push rod in the turret. The large end is bored parallel,

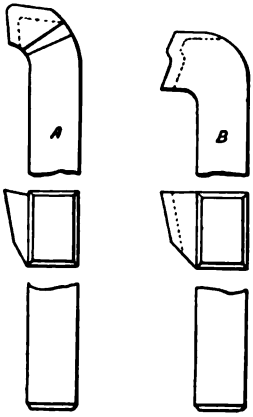

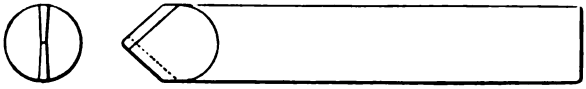

C

Fig. 437.

and faced with the turning tool (Fig. 437, A) held in the square turret. The projection is next formed with the tool (Fig. 437, B), also in the square turret. The bottom is then rough bored with the drill (Fig. 437, C), held in a split bush in the standard

holder in the turret. The radius is now rough bored with a slide forming tool in the turret, using the tool holder (Fig. 438) gripped in a split bracket attached to the turret, and the former (Fig. 439). The finishing operation is done in the same way, substituting a finishing tool for the roughing. The finishing tool has its nose ground to a larger radius, and has less top rake than the

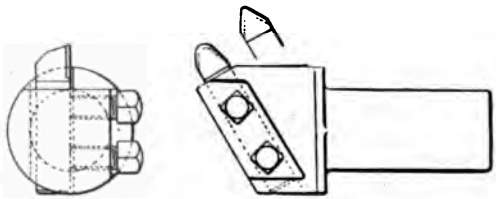

Fig. 438.

roughing. The parallel portion is then finished with the tool (Fig. 437, A) in the square turret.

After a quantity have been finished in this manner, the series of second operations is gone through. The shell cap is chucked on the drawback arbor (Fig. 440) with nose piece, and driven by the peg A fitting in a slot cut in the waste part of the cap. The nose piece fits the drawback collet nose at *a*, and is bolted by the flange B to the spindle flange. The expanding ring C is split in three places, retained by the spring ring *b*, and having three slots in the body to control the chucking pieces *c*, which, with the nose *d* of the nose piece are thrust into the shell cap. After chucking, the tool (Fig. 437, A) in the square turret is used to rough turn the point. The large radius is turned with the special tool and tool holder (Fig. 435) on the turret, and a former similar to Fig. 434, but of a different curve, on the square turret. The tool (Fig. 441) is next used to finish the form point, being held in the square turret. It also forms the radius at the large and, and cuts off, so completing the cap. There are many

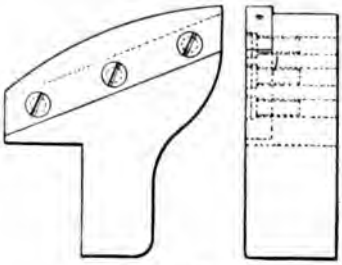

Fig. 439.

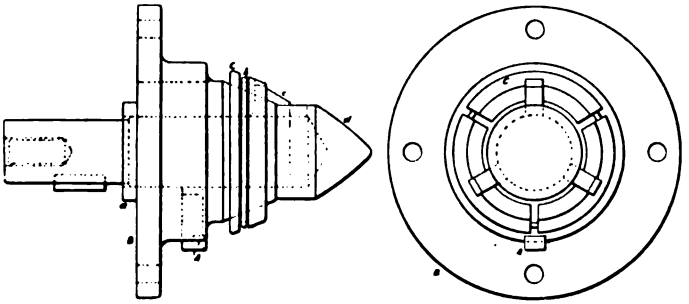

Fig. 440.

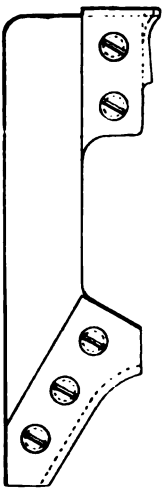

Fig. 441.

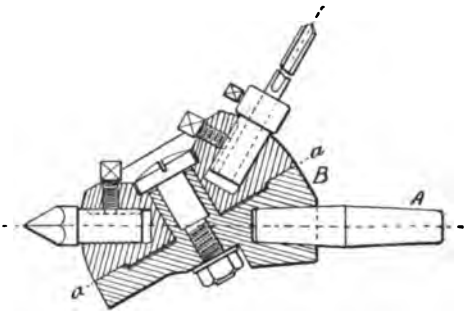

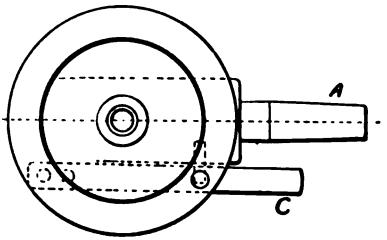

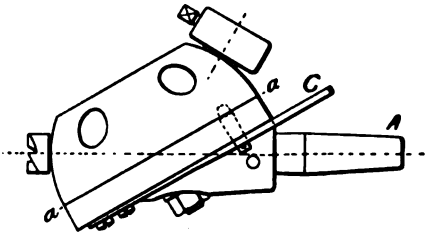

Fig 442.

interesting details in the forms of these tools which we need not describe in detail, but which can be studied from the drawings, reproductions from the shop ones of Messrs Herbert.

Fig. 442 is a useful attachment for the poppet, which is of value in cases where a turret is not fitted to the lathe, and is suitable for a good range of small work. A stud A, fitting in the poppet barrel, carries the base B of the turret, upon which the turret proper fits, by an annular face *a*, and is retained by the central bolt seen. The face *a* is inclined at such an angle that each of the tool holes in the turret comes in line with the lathe centre, when brought into position. The spring handle C locks the turret in each of its positions, by means of a pin. Any kinds of ordinary tools can be held in the turret holes, and the feeding up is done, as in drilling, with the poppet screw and handwheel. It is obvious that a good range of work can be tackled with this appliance, and the cutting off, or similar operations can be done from the slide rest, so that all the advantages of a turret lathe are secured. To get the full advantage the lathe spindle should be hollow, enabling bars to be slid through as they are turned and cut off. This attachment is by Messrs G. Birch & Co., Manchester.

SECTION VI.

MISCELLANEOUS MATTERS.

CHAPTER XVI.

SPECIAL WORK—MEASUREMENT, GRINDING.

The Vertical Boring and Turning Mill—Turning Pulleys—Fitting Tyres to Centres — Ball Turning — Backing-off — Gear Cutting — Measurement — Movable Calipers—Fixed Gauges—Limit Gauges—Gauged Fits—Micrometer Gauges—Barth's Slide Rule—Warner Cutmeter—Testing Lathes—Parallelism—Bars between Centres—Face Plates—Cross Slide—Lost Motion in Screws—Spindles and Bearings—The Grindstone and Emery Wheel—Precision Grinding—Sellers' Machine.

IN this chapter we touch on sundry matters which do not belong properly to the previous chapter contents, and which do not admit of extended treatment in a book dealing with the general aspects of the work. Outside the common lathe work which we have considered, there is a large and increasing volume done in lathes of a special character. There are also methods of measuring, and gauging to be touched on.

The value of the vertical boring and turning mill has been receiving due appreciation in recent years. It affords an example of an old design long neglected, and revived and developed in America and in England under the pressure of competitive manufacture. It is a lathe—often termed a vertical lathe, because its axis is vertical, instead of horizontal, as in the common type. It is also a duplex vertical lathe, because provision is made by two tool holders for the simultaneous operation of two tools. In the largest there are sometimes used two for turning, and one for boring.

The advantages of having the spindle vertical and the face plate or table horizontal are these:—

Chucking occupies much less time, because the work lays and is adjusted on a flat horizontal face instead of being slung and adjusted on a vertical one. The table is supported and rotates on a flat annular face next its periphery as well as on the central support of the spindle or mandrel. The result is that heavier cutting can be done, due to the absence of spring in the table. No counterbalancing of irregularly-shaped pieces is necessary, as is done when such pieces are chucked in a horizontal lathe, and which interfere with uniform rates of rotation. When a number of similar pieces, as those of segmental form have to be chucked, they are much more easily arranged on the horizontal table than

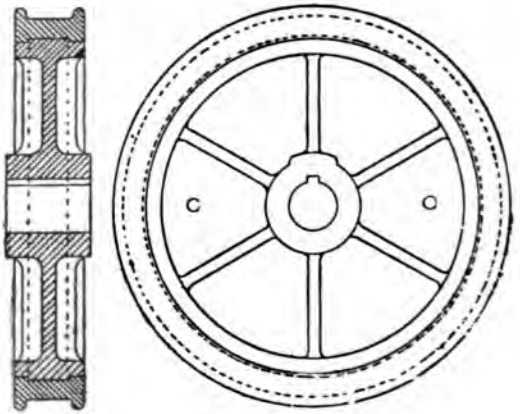

Fig. 443.

on a vertical face plate. Besides this, all the advantages which are possessed by the best face lathes are present in the vertical mills.

Changing the axis of the lathe from horizontal to vertical, as in the vertical machines, involves many alterations in design in the table, spindle, and in the tool slides. With regard to the table and spindle, the design resembles in some respects that of the heavy face lathe in this respect, that the end of the spindle is formed into a solid broad flange to which the face plate is bolted, and that the driving is through a wheel nearly as large in diameter as the face plate. On the other hand the spindle neck of the

vertical lathe is tapered for taking up wear, while the necks of heavy horizontal lathes are mostly parallel.

Among special lathes those for turning the rims of belt pulleys are useful in factories that manufacture these in large quantities. To turn a pulley in a common lathe the arms are pinched against the face plate, and this tends to spring both them and the rim slightly out of truth. Also the hole is bored at a disadvantage. The proper way to turn a pulley is to bore the hole first on a vertical boring lathe or mill, mount it on a mandrel by the bored hole, and turn the rim. This divides the work between two machines, and saves time, while producing more accurate results.

The pulley on a mandrel between centres in the pulley lathe, is driven by a Clements equalizing driver. There is thus no strain exercised on the arms, but a driving force only in the plane of the arms. The turning is done by two tools held in rests on opposite sides of the rim. The rests are adjusted inwards and outwards on graduated ways, and clamped by bolts in tee slots, and they can be set at an angle to give the desired bevel for crowning.

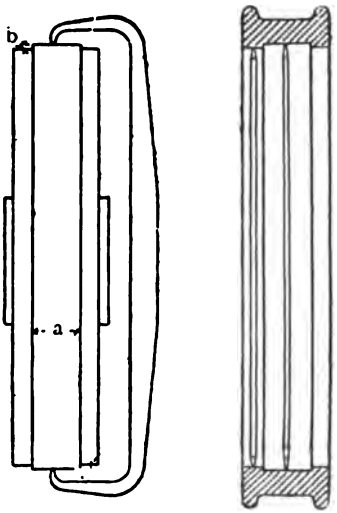

Fig. 444.

The mandrel is driven at a slow speed through a worm and tangent wheel. As therefore the cone pulley runs at a much higher speed than the mandrel, it is utilised for polishing, for which a steel mandrel and rests are provided, other operations going on simultaneously.

The details of the fitting and shrinking of tyres to centres (Fig. 443) are as follows:—

The centre is turned and the tyre bored to fit, with an allowance for heating and shrinking on. The depth of the shoulder *b* (Fig. 444), is about $\frac{1}{16}$ in. The allowance for shrinking tightly is about $\frac{1}{64}$ in. on a 2 ft. centre, but it will be slightly less or

more according to the hardness or softness of the steel tyre, more shrinkage being safely permissible on the latter than on the former. Measurement is made by the turner with a caliper and a rod gauge. As there are two diameters, two sets of gauges are required. A fixed caliper is shown embracing the larger diameter of the centre in Fig. 444. Two rod gauges are seen—one in each diameter of the tyre bore—in Fig. 444. Fixed calipers do not always pay for the making, because of variations in the bores of the tyres when they come from the steelworks, which sometimes necessitates a variation of $\frac{1}{8}$ in. in the bored dimensions and in the diameters of the centre. Common calipers are therefore often used. But it is desirable as a rule to make fixed calipers and to stamp them with the order number of the job, and put them away with the rod gauges for future use and reference. The width of shoulder *a* is checked by another pair of gauges (Fig. 445). The central hole for the axle is bored at the same setting as that for the turning. The centre is chucked by means of bolts passing through its disc into a slotted face plate; the tyre is chucked in the dogs of a chuck, gripping the outside edges.

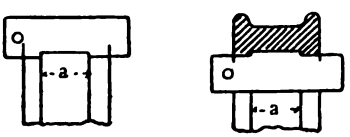

Fig. 445.

After a number of tyres and centres are thus prepared, they and the tyres are heated in a reverberatory furnace to a bright red. The centres are laid upon a levelling block. The tyres on being taken singly from the furnace are slung in the hooks from a crane embracing the flanges, and lowered each over a centre, which they will clear slightly when at a good red heat. If the tyres get crosswise and so become hitched in the centres, they may become fixed thus, due to the shrinkage which very soon takes place. Occasionally it has been necessary to break a centre to get off a tyre so fixed, or the centre has been saved by running segments of molten iron round the tyre in the foundry, so causing it to expand sufficiently to allow of the removal of the centre.

After the tyre is lowered down into position, and while it is shrinking and cooling, a large amount of heat is transmitted from it to the centre. Then two risks have to be guarded against. One is the expansion of the centre and stretching of the tyre, so preventing it from fitting tightly when cold. The other is the

fracture of the centre, due to the outer parts becoming very hot while the central portions remain cold. To prevent these contingencies from occurring, cold water is poured from a can into the depression formed by the rim round the disc. As the water becomes hot, some of it evaporates, or is removed to make room for fresh supplies of cold. This is continued until the hand can be placed and held on the work. Occasionally centres are made with arms. It is not good practice, because they are so liable to fracture. When such are used, the spaces between the arms have to be filled up with stiff clay, so that the centre will retain the water poured in for cooling.

After the tyres have been shrunk on, the axles are driven into the bored holes and keyed, and if the treads have to be turned, then this is done with the axles running between centres. The wheels being therefore turned on their axles must run perfectly true.

It is not necessary to turn the outer faces of tyre and centre. But this is often done for good appearance. It is seldom that tyres and centre castings will be of exactly the same width so as to be quite flush. It is better for good appearance, if the two are not to be faced off, to let the centre be $\frac{1}{16}$ or $\frac{1}{8}$ in. wider than the tyre.

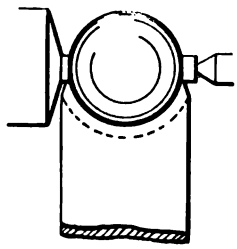

Fig. 446.

There are two small bolt holes required in the centres (Fig. 443) for chucking by. These are cast in simply for the purpose of bolting the centre to the face plate during turning. It is the only available method of chucking.

Ball turning generally has two applications, that of smoothing up governor balls, and turning ball valves for brass work. An adaptation of a spherical slide rest working a single pointed tool in a circle arc, is an accurate method, but in the usual practice of the shops the work is done in an ordinary lathe, using a concave scraping tool for the purpose, as in Fig. 446. If balls are turned from solid bar, the roughing out is first done with a single pointed tool, by hand, or by manipulating the traverse and cross slides of the rest by hand. Then the concave forming tool finishes. Governor balls are generally cast with holes through them, in which, after reaming, a mandrel is driven, and the ball turned on

it. They are also cast with tits to centre by, and when the greater portion of the surface is finished, the tits are nicked down, severing the balls, which are then finished at the end by filling, or with a ball cutter.

A ball cutter (Fig. 447), is a hardened steel tube, with a bore ground true, leaving an annular scraping edge. A handle is screwed into the tube. This tool is used for smoothing and polishing balls, during which process the balls are held in a cup chuck, made of hard wood, or of a soft alloy, as equal parts of tin and lead, the chuck being tapered, rather than concave, so that the pressure of the tool against the ball tends to tighten it in

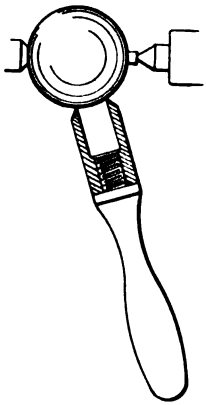

Fig. 447.

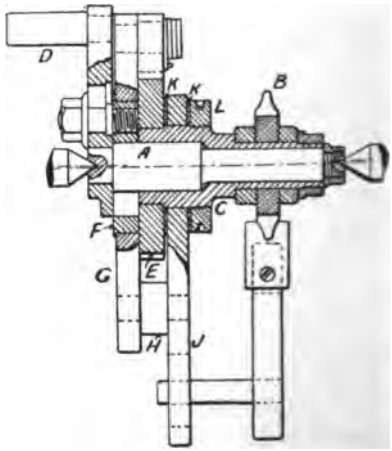

Fig. 448.

the chuck. The position of the ball in the chuck is repeatedly shifted, to present fresh surfaces to the ball cutter.

Backing-off, or relieving assumes greater importance as the use of profiled, and relieved milling cutters increases. Many special lathes are designed solely for the work, into the details of which we cannot enter, but the principle is that of using a tool, of the profile shape of the tooth, and causing this tool to advance as the work is rotated, so imparting a relief, while still retaining the tooth shape intact. A device which accomplishes the work, and used in an ordinary lathe, is illustrated in Fig. 448, and will be sufficient to show the principle of the operation. The mandrel

A is mounted between the lathe centres, slightly eccentric, so that the necessary relief is imparted to the milling cutter B, mounted upon a sleeve C. The mandrel A is driven by the carrier D from the lathe driver plate. A ratchet wheel E, is fitted on the sleeve C, and between this ratchet and the driver D is an eccentric F, provided with a stud which projects into a slot in the driver D, and which can be clamped to the same by the nut. A rocking arm G is mounted on the eccentric, and has a slot in its end to embrace a pin H fixed in the arm J. A pawl is fitted at the other end of G, to engage in the ratchet teeth. Therefore when the mandrel A is revolved, the rocking arm is operated by the eccentric, and the cutter, with its sleeve is turned through a partial rotation. The arm J is a slipping fit upon the sleeve, and has washers K, K, adjusted by the nut L sufficiently to prevent the arm J from turning except under the action of the pawl. The eccentric is adjustable, and is set to turn the cutter ahead one tooth at each rotation of the mandrel. Each tooth is thus brought in turn against the relieving tool. The ratchet wheel being provided with thirty-six teeth, and the eccentric capable of being set to throw one, two, three, or four teeth, cutters having nine, twelve, eighteen, or thirty-six teeth may be backed off.

The practice of gear-cutting and milling in the lathe, though mostly discarded in the big shops by the introduction of the special machines adapted for that class of work, is still carried on in small establishments, especially for the smaller kinds of gears. Such work is done by an attachment fitted to the cross slide of the lathe, and it also involves an adjustable pulley on an overhead countershaft, which pulley must be counterbalanced in order to take up the slack of the driving cord. Fig. 449 gives two views of an attachment of this kind by Messrs G. Birch & Co., of Manchester. The swivel base fits on the cross slide (in place of the compound rest), on which it can be set to any required angle for cutting bevel wheels. When set square it is suitable for cutting spurs. It will also deal with straight toothed worm gearing. In these Figs. the pulley A receives the driving cord, which runs on and off the two guide pulleys B, which are capable of slewing bodily around the axis of A to suit different angles of drive. The latter takes place through spur gears C and D to the spindle E, coned to receive cutters or arbors. The pulley A can also be attached to the top of the cutter spindle E,

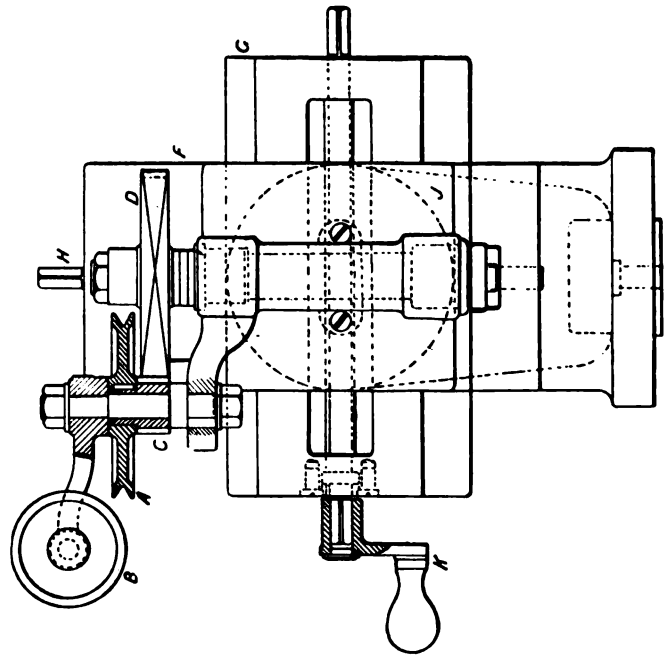

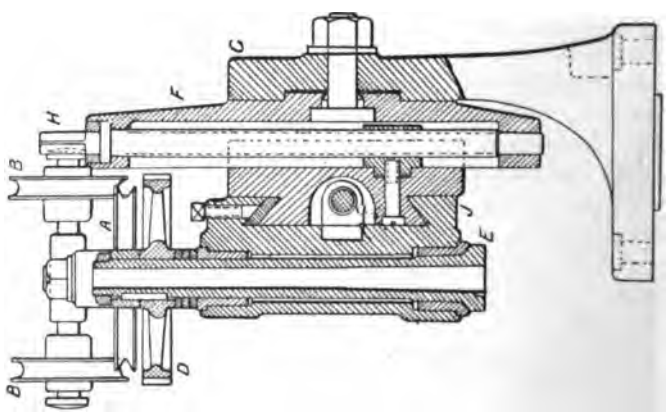

Fig. 449.

when a high rate of speed is required. The cutter spindle with its slides can be moved round the face of the standard G, which, like the base, is graduated. There are two compound slides F and J, the movement of the spindle vertically being effected by the screw H, and horizontally by K. The pitch of the wheels being cut is of course obtained by a dividing plate on the lathe headstock.

Notwithstanding the development of the gauge system of measurement the calipering of work still occupies a pre-eminent place. This is true to a much greater extent in the jobbing shops than in those where specialties are handled. Each system fills a useful sphere. Calipers may be used in three ways, the measurement taken by them may be checked by a common rule, or by another pair of calipers, internal fitting external, or *vice versâ*, or by a gauge. The rule method is suitable for much work of an ordinary character, internal calipers and external calipers are tried over one another when bored and turned parts have to fit, calipers are tried against gauges when work has to be done to gauge. But in all kinds of calipering, however tested, a great point is to avoid spring, the presence of which will cause false reading. If there is any tendency to elasticity in calipers, and there is generally some, more or less, the workman must exercise a very delicate touch to avoid a tight fit, the merest contact alone being permissible. Another thing is the avoidance of cross measurement. If calipers are held diagonally they do not of course register the exact diameter. Another common evil to be guarded against is that of measuring work while running in the lathe. This is justifiable when roughing down to obtain approximate sizes, but not when fine measurements are in question.

The inaccuracies which frequently result from the use of movable calipers are the reason why fixed calipers have long been employed in the shops for measuring standard dimensions in work frequently repeated. These are termed horseshoe calipers, and also snap gauges. They measure one dimension only, and when properly hardened and ground maintain their truth for a long time in fair service. The equivalent for inside calipers is the rod gauge.

For the average run of work the plug and ring gauges, the forms of which are well known, are generally more convenient, because they fit around the entire circumference of bar or hole.

When turning parallel pieces of work the diameter is measured frequently without stopping the lathe by sliding the ring gauge along the bar, by means of which tight and slack fits are easily detected. Plug gauges are also used in the same fashion during the boring of holes. This mode, though commonly practised, is rather rough on the gauges, and should not be permitted in the case of high-class instruments.

When calipers fit calipers, and gauges, gauges, the provision for the various fits, easy and driving, which are required in the shops, depend entirely on the workman's sense of touch. To provide something more accurate and uniform than this is the object of the limit gauges. These are made smaller or larger than standard dimensions by a predetermined amount, and this constitutes the "difference," or limit of fit. Such gauges are stamped + and −, or "go on" and "not go on", and the use of these opens up the very wide question of the limits of tolerance to be allowed in different classes of work. It is obvious that these differences must be rather wide in the extreme cases of very rough, and very high-class precision work. And closely connected with this is the subject of reference gauges, by which dimensions are tested from time to time. To carry out this system in its entirety a large number of limit gauges are necessary, because the limits have to vary with the difference in the side of hole. A smaller allowance is given in small holes than in those of larger diameters. Gauges are therefore made in which allowances can be changed for different diameters, measurement being taken by a series of hardened steel bars. To carry out the system properly, provision has to be made for force fits, driving fits, and running fits. And in running fits three different classes are recognised, one suitable for engine work, another for high speeds and average machine work, and another for fine tool work. The point is that these various fits are embodied in the gauges issued by the toolmaking firms, or made in the shops of the firm using them.

The following allowances are those embodied by the Newall Engineering Co. Ltd., of Warrington, in their gauges. They recognise three separate allowances for running fits, one of which only—the medium, suitable for good average machine work—is given here.

which lies directly against the inner scale on the bottom disc, and which is so adjusted relatively to the two arrows that the cutting speed that corresponds to a certain diameter, and the readings of the two arrows, is read off directly opposite to that diameter.

Example.—By drawing a chalk line along a shaft calipering 9½ inches in diameter and noting when this line revolves past the point of the cutting tool, it is found that the shaft makes 30 revolutions in 1.32 minutes. How many revolutions does the shaft make per minute, and what is its cutting speed?

As the shaft made 30 revolutions in 1.32 minutes it evidently made 10 revolutions in one-third of that time, *i.e.*, in 0.44 minutes; setting the one arrow to read 0.44 on the scale of time for 10 revolutions, we find the other arrow to point to about 22.7 revolutions per minute, while opposite to 9½ inches on the scale of diameters we read off the corresponding cutting speed to have been about 56.5 feet per minute. This is the example for which the instrument is set in the illustration.

Whenever a diameter less than an inch is dealt with, which will frequently be the case when the cutting speed at the circumference of a drill is to be determined, read off the cutting speed for a diameter ten times larger than the one under consideration, and then divide this cutting speed by ten.

The reversed use of the instrument for determining the number of revolutions per minute at which a piece of work of a certain diameter must revolve in order to give a certain cutting speed, will be self-evident to the reader.

Another device to lessen the work of the turner is the "Cut Meter," made by the Warner Instrument Co., and devised to indicate at once the surface speed of a rotating shaft, or spindle. A rubber-tyred wheel is held in contact with the work being tested, and this, through the medium of a tachometer device, enclosed in a box, shows the surface speed in feet per minute upon a card, without any calculation or trouble whatever. The instrument may be obviously applied to other jobs, as drills, and boring bits.

As lathes wear, they require to be tested from time to time, and corrections made if necessary. Parallelism may be tested by setting a long bar between centres, and turning up one end for an inch or two; then reverse the bar in the lathe, and without altering the rest setting, turn the reversed end for an inch or two.

Run the slide rest along to the end first turned, and if the tool just makes contact, and without taking a cut, the turning at each end is equal in size and parallel, and the lathe centres are true. Another way is to take a bar, turn it up between the centres, and turn one end taper to fit the mandrel bore, taking the place of the live centre, the remainder of the bar being turned perfectly parallel. The tapered end is now fitted into the spindle, and the poppet removed away. If the lathe is true, the bar will run truly. As the overhang of the bar is considerable a good plan is to drill it up, and so lighten it, making it tubular instead of solid. Another method is to turn two discs of large diameter, say nearly as large as the lathe will take, each turned up carefully and fitting by a stem, one to the live spindle, the other to the poppet spindle in place of the centres. If these are then brought up face to face, and fit all over their faces, and flush round their circumferences, the lathe spindles are true. Want of truth will be evident in the discs standing apart, over portions of their faces, or in the circumferences not matching, or both. A refinement in such testing is made by inserting pieces of paper between the disc faces, and then pulling at them to see where the fit is tight or easy.

To test whether the cross slide of the rest is at a right angle with the lathe bed, and the live spindle, take a fine cut over the face of the largest face plate the lathe will carry. Then try a straight-edge across the plate; if the face is true—neither convex, nor concave—the slide is at right angles. A fine test may then be made with paper, gripped between a bar held in the rest and the face of the plate, moving the end of the bar across and testing at intervals.

There are other matters which have to be tested from time to time, particularly the slack of the screws, and of bearings, and the truth of the bed. The last named can be tested by a straight-edge and spirit level, since beds will sometimes go out of truth by settlement of the foundations as well as by wear. The wear on a bed is always more severe near the headstock than elsewhere. Lost motion on the screws is bound to occur in time, this can be easily tried by ascertaining how much they can be moved without giving motion to the slides. This can only be corrected by fitting new nuts. But as all lathe screws have some amount of lost motion, this gives little trouble if the turner is careful to take it up, before commencing any precise work, such as screw-cutting, or turning to

fine dimensions. Spindles can be tested by micrometer calipers, or caliper squares at different places round the diameter. Should they become scored badly, they must be reground, and new bearings fitted. The fit of a spindle in its bearings can be tested with oil, coloured with very thin redlead, or as some prefer with Prussian blue, which does not contain grit. Testing may also be done on lathes with indicators, of which several types are in use. Very delicate tests of the running of spindles and turned work may be performed with these instruments which magnify any divergence from accuracy, and indicate the same upon a divided scale.

Turning tools are in many shops treated on the grindstone, although the emery wheel has largely invaded the sphere of the stone during recent years. Grindstones also are generally destitute of any appliances for presenting the tools at fixed angles, so that the workman has to use his eye as a test, or employ a gauge, and the tool is laid on a bar that bridges the trough in front of the stone, and which is moved inwards as the stone wears. A considerable number of grindstones now have a tool holder fitted in place of this bar, with compound slides, and a good system of water flooding, applied to the stone only at the time of grinding, and over the area where grinding takes place.

The emery wheel has taken the place almost entirely of the grindstone in many engineers' shops, often too in combination with attachments for holding the tools at precise and uniform angles. The highest development in this direction has been made by Messrs William Sellers & Co. Incorporated. One of their machines is illustrated in the author's work on "Tools" with fully detailed drawings. Another is shown here by a photograph only (Fig. 451). It is designed for grinding all ordinary single-edged cutting tools, used on the lathe and allied machines, with the most exact precision of angle measured in degrees. Also the outline of a point of a tool, or any number of similar tools can be produced with uniformity by means of a former, and such being the case, it follows that the shapes of tools ground at different periods can be produced exactly by these aids. No skilled labour is required, for a man or boy can take charge of all the tools in a shop. Looking at the photo (Fig. 451), we see that the entire mechanism is carried on the combined stand and water trough. This mechanism comprises the grinding wheel, the tool stand, and tool

holder, which receives movement for grinding tools straight forward, convex, or to an angle. The entire holder is oscillated by the movement of the arm seen to the left, about a centre in the base,

Fig. 451.

the amount of which movement is controlled by the handle above, and it is maintained in equilibrium by adjusting the tension of the spring below, so that when oscillated by the handle the muscular work is reduced. Adjustment of the tool towards the grinding

wheel is effected by the hand wheel seen above. The traverse of the tool past the face of the wheel is effected by the movement of the oscillating arm along a shaft, by the hand wheel seen at the side, which operates a screw. The tool holder is a bush, with a rectangular opening for square tools. It is gripped in a split boss, and the holder can be adjusted for angle on a horizontal quadrant base.

For grinding tools with curved faces an oscillating holder is provided, seen on the ground to the right. A square stem on the chuck takes the place of the tool in the holder, and serves to support an oscillating frame, which carries a tool holder by means of trunnions, and partakes of the oscillation of the frame. The ends of the tool holder are shaped as a former, which is held in contact with a guiding face by a counterweight. As the holder is oscillated about its bearings the effect is that a round faced tool is ground to correspond with the shape of the former. If the tool projects beyond the former, the radius of its nose will be larger in direct proportion to the amount of such projection. If the tool point lies within the former, the radius of its nose will be less: in this way a sharp pointed tool may be ground. It is possible therefore with one former to grind all straightforward tools. To grind bent ones, holders right and left handed are fitted to the oscillating frame. Tools are set in the holder by a gauge. The emery wheel has two movements, one of rotation and one of traverse, effected respectively by the large and small pulleys seen at the extreme right. One of these is keyed on the shaft, the other on an extension of a double clutch, sliding on a sleeve, within which sleeve the wheel shaft runs, and partakes of its sliding motion. This prevents grooving of the wheel. The two pulleys revolve independently of each other, but slide in unison, and a roller operating on either side of a groove, one edge of which is circular, the other cam shaped, either prevents endlong motion, or produces a reciprocating movement. Charts are supplied with these grinders, giving standard angles for the various tools ground, and the suitable angular settings of the tool holder, &c., by which the tool angles may be produced.

CHAPTER XVII.

TOOL HOLDERS.

Limitations to Use of Holders—Divisible into three Groups—Group with Constant Top Rake—The Babbage Holder—Swivelling Cutters—Designs of—The Tangye—Smith & Coventry—Armstrong—Taylor—Group with Constant Front Rake—Round Tool Points—Allen—Willis—Smith & Coventry—Group with Straightforward Cutters—The Bent—Timms—Curved Tools—Disc Tools—Double-edged Tools—The Haydon Bar—Miscellaneous Holders—Armstrong Boring Holder—Taylor Boring Tool Holder—Screw-cutting Tool Holder—Taylor—Armstrong—Pratt & Whitney—Observations.

ALTHOUGH a good deal has been written about tool holders, or cutter bars as some prefer to call them, these descriptions, and the discussions to which they have given rise, have mostly centred round three or four well-known types. Outside of these there is a larger number of bars and a greater number of designs which are less known.

Although various tool holders have been boomed for something like thirty years past, they have been employed to but a limited extent by comparison with solid tools. In some shops they are used for all work except the heaviest. In others they are employed only on a few lathes. This is not because there are no good tool holders, for there are several; but the reason lies partly in their limitations, partly in the fact that tool holders of a more novel form have invaded the shops and are effecting great changes in practice. I allude, of course, to the growth of box tools in turret work.

The limitations to the use of tool holders of the bar form are these: the rise in temperature of the tool points under heavy cutting, and the want of range in the forms of the points.

The first-named drawback—the rise in temperature under heavy cutting—is due to the difference in the mass of a tool forged solidly with a massive shank, and that of a small piece

gripped in a holder. The heat is not distributed into the body of the holder in the latter case to the same extent that it is in a solid shank. This is the main reason why, apart from exceptional conditions, as that of deep boring, the solid tools are retained for heavy work in shops where holders are employed on the lighter lathes. A lesser reason is the chance of the tool point slipping under great pressure.

The second point—namely, the want of range in angle and in shape—is practically inseparable from any design in which either the angle of front clearance or that of top rake is embodied in the holder itself, as in the case in most designs. Neither angle should be uniform for all metals and alloys. Yet it is most desirable that one angle, or both, be embodied and fixed in the design of grip used. And when this is done for one angle, variations in the other must be made by grinding, and so one of the advantages of the tool point, that of simplicity of form, is sacrificed.

Another matter is, that as turning and boring have to be done in three ways, with straightforward and with right and left hand tools, tool points must be forged to these shapes, or else the holders must be made straight and cranked, or slotted, or to swivel. Further, one holder will not take different sizes of tool points for smaller and larger lathes, and therefore holders must be made in different sizes.

Then, again, the standard tool points do not cover the whole range of work involved in the various finishing tools, as those of concave and profiled forms, nor of broad finishing or comb tools. Exceptions occur, but the contention is that if a tool holder is designed to use simple bar and to embody constant angles, the usual forms are not available.

The tool holders vary much in design, yet they mostly fall into great groupings. The essence of a tool holder being fixity of one tool angle, we have three broad groups, those in which the top rake is constant, those in which the front rake or clearance is invariable, and a third miscellaneous group in which the holder is simply designed to grip a straightforward form of tool which can be ground to any angles. Besides these there are boring tools and screw-threading tool holders, which may be classed as another group.

An early tool holder by Mr Babbage (Fig. 452) has been in its essentials the parent of later ones of the constant top rake type.

The tool was a rectangular piece of steel, having its end ground at an angle of about 60°, with the shank. The holder, cast in gun-metal, and cranked, was pierced with a round

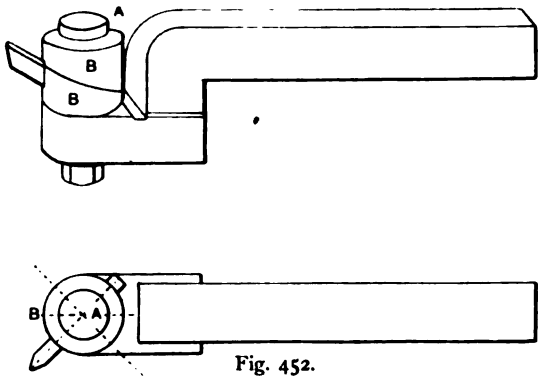

Fig. 452.

vertical hole to receive a bolt A, having a long slot for the tool, the bolt being secured with a nut below. The bolt also passed through two circular washers B, B, meeting by inclined faces of 27°, and checked together with steadying pins. The lower washer was slotted to receive the tool, and the upper also, and between the two the tool was pinched, while the circular fitting permitted the washers, bolt, and tool, to be adjusted straightforward or right and left handed to an angle of about 45°.

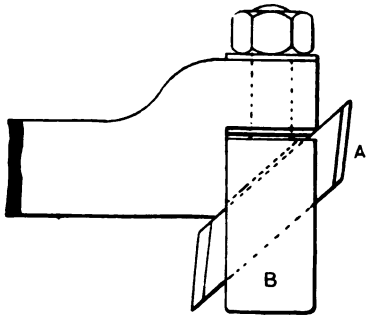

Fig. 453.

The germ of many holders of this type, where the top rake is made constant, has a flat cutter A (Fig. 453) pinched at an angle in the cylindrical body of the clamping bolt B. The act of tightening the bolt clamps the tool between the bottom of the slot and the edges of the shank. The cutter can be swivelled in its bolt in any horizontal direction, for straightforward and right and left

hand leading. The amount of front rake or clearance can be altered, but not the top rake. The cutter is double-ended, which admits of two variations in front clearance.

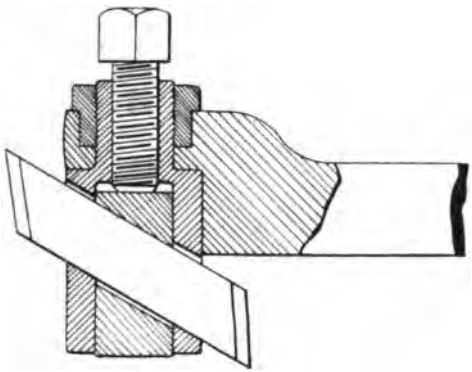

Fig. 454.

In another holder of the same general design, in which the top rake is constant, the cutter is gripped between a swivel head enclosing a plug, the pinching being effected by a set screw above

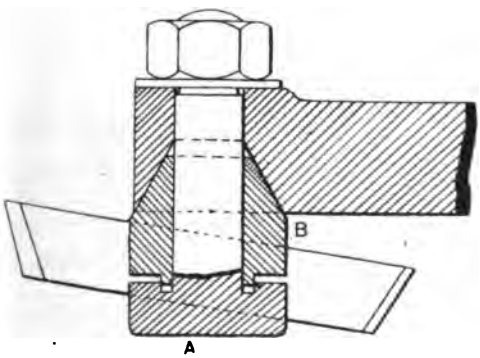

Fig. 455.

(Fig. 454). The head swivels in its socket in the end of the bar, and when the tool is thus set, it is tightened by a nut.

In Fig. 455 the cutter is held between the head A of a bolt and a conical washer B, both recessed at the side to receive the tool.

In the Tangye holder there are three slots in the head for the cutter, which is approximately of a vee shape. One is straightforward, and one each for right and left hand cutting, set at an angle of 45°. The angle of top rake is fixed, and the front of the tool is ground. It is pinched with a set screw through the top of the boss.

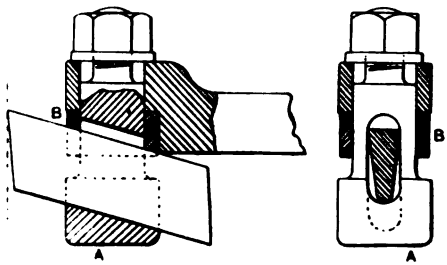

Fig. 456.

The Smith & Coventry holder (Fig. 456) permits the tool to swivel at any angle. Here the cutter is of the form of a truncated wedge. The front face alone is ground, and this gives a clearance angle of 1 in 8, or about equal to 7°. The cutting angle is constant, being 68°. It can be altered, if necessary, by grinding the top face. The tool is gripped and swivelled thus: it is

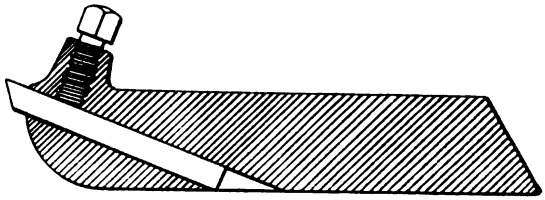

Fig. 457.

supported in a recess in the swivelling rest A, which is prolonged as a tail to form the clamping bolt. The tool is pinched between A and the collar B. It can be moved back and forth in its holder also to get it into recessed work, and the cutting point can be ground flat, convex, or vee'd, as required.

The Armstrong tool holder (Fig. 457) is a very simple design, in which the top rake is constant. An inclined slot in the end of

the bar receives a square tool, which is pinched with a set screw. It is designed for use in American lathes, being made in various cross sections of steel to suit different posts ranging from $\frac{5}{8}$ in. by

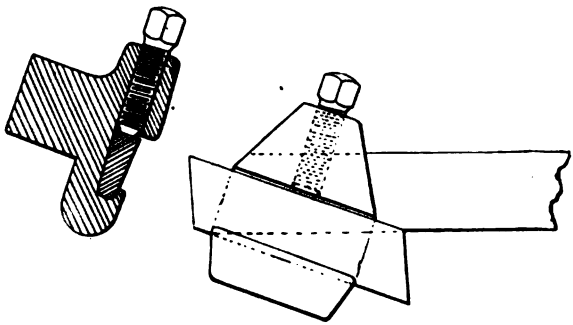

Fig. 458.

$\frac{3}{4}$ in. by 5 in. long, for cutters $\frac{3}{16}$ in. square, up to $1\frac{1}{2}$ in. by $2\frac{1}{4}$ in. by 20 in. long, for cutters $\frac{3}{4}$ in. square.

The hole for the tool is cut through the solid, self-hardening steel being preferably used for the cutters.

The holders by Mr Charles Taylor, of Birmingham (Figs. 458

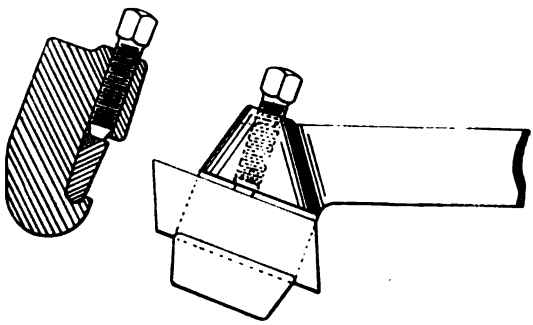

Fig. 459.

and 459), give constant top rake. The difference between the two is that the first is for elevating tool posts, the second for flat-topped slide rests. The advantages are that the cutters can be put in from the side, so that the holder need not overhang the front of the rest. They will also turn up to a shoulder,

Long pieces of steel can be inserted, which is not wasteful of material.

Coming to holders of the second class, there is one which has appeared in various guises, in which the front rake is rendered constant by setting a cylinder cutter in a hole drilled in the boss of the holder at the angle of front clearance. The cutter is secured there with a wedge or wedges, tightened by a screw bolt forming the tail of the wedge, the bolt being set either horizontally or vertically. The hole for the cutter can be drilled at an angle sideways to give side rake to the leading edge in traversing. Top rake can be altered easily by grinding the upper or cutting end of the bar at varying angles.

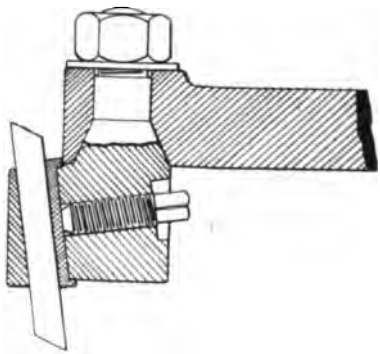

Fig. 460.

The simple wedging of a round tool, with or without serrations on the surface of wedge and tool in contact, is a rather old device. In Allen's tool holder the cutter is of circular cross section, and set at an angle, similarly to the round tool points in the earlier Smith & Coventry bar, but it is gripped by means of a wedge behind it. To prevent slip, the back of the tool and the face of the wedge are serrated to correspond.

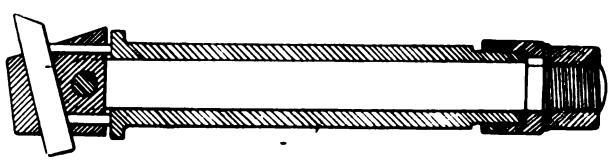

Fig. 461.

A sub-type of tool holders is that in which the tool is clamped between the side of the head and a loose jaw, originally designed by Professor Willis. In one of these, the tool, of square section, is ground in graver fashion, and the recesses in head and jaw are therefore angular. Serrations on tool and grips prevent slip during heavy cutting.

In another design of a tool held in a vertical angle the method of clamping is similar to that adopted with trammel heads (Fig. 460), a strip being pinched against the cutter body by a screw. The holder is fitted in the end of the shank with a conical-necked bolt.

The plan sometimes adopted of clamping a tool in a hollow boring bar by a long bolt passing through the centre has been designed for tool holders for lathes.

In one of these the tool holding head is in one with the bolt or bar (Fig. 461) that passes through the hollow bar which is clamped in the rest. The head is pierced to receive a cutter at a vertical angle, giving constant front rake. Pins behind the tool, and passing through horizontal slots in the head, secure it when the bolt is drawn back in the hollow bar by the tightening of the nut in the rear.

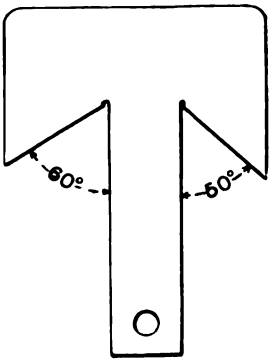

Fig. 462.

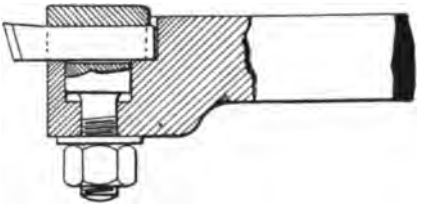

Fig. 463.

In the Smith & Coventry holder, illustrated on page 44, a constant front clearance angle is maintained for the cutters, and the top bevels alone are ground. A cutting angle is embodied, of 50° for all wrought metals, and one of 60° for all cast metals, a gauge (Fig. 462) being used for grinding by. The tool point is pinched by the set screw seen in the section, Fig. 31, page 44. The maximum depth of cut possible with these points is not greater than one half the diameter of the steel. This is a good tool for roughing out.

We now come to the third group of tool holders, which are not covered by the two broad types just noticed.

In an early design of bar (Fig. 463), using horizontal cutters, the cylindrical tail of a swivelling bolt, pierced to hold the tool,

is set uppermost in the bar, the clamping nut being below. The tool point here is just an ordinary lathe tool, with a short shank

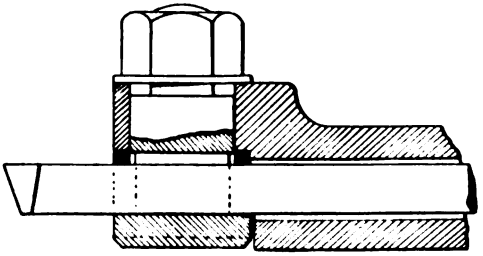

Fig. 464.

clamped in a horizontal slot in the cylindrical part of the bolt, and all the angles are obtained by grinding.

In the "Bent," one of the horizontal designs (Fig. 464), the

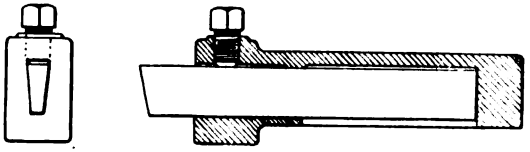

Fig. 465.

tool passing through a slot in the clamping bolt also enters into the hollow shank of the holder, which assists to retain it firmly under heavy cutting. In another horizontal design (Fig. 465), the cutter, of vee section, fits into a recess cast in a shank, in which it is clamped down with a set-screw. The Slate cutting-off tool (Fig. 466) is an application of a horizontal cutter to a single function.

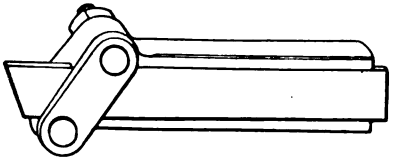

Fig. 466.

The Timms (Fig. 467) is a good tool holder of the horizontal type, using ordinary lathe tools with short shanks, or with long shanks in the case of those used for boring. The end of the holder receives a bolt, the head of which is above and the nut below.

The tool passes through a slot in the head, and the tightening of the nut clamps it between that and the end of the shank. A slot cut in the shank of the holder receives the free end of the tool

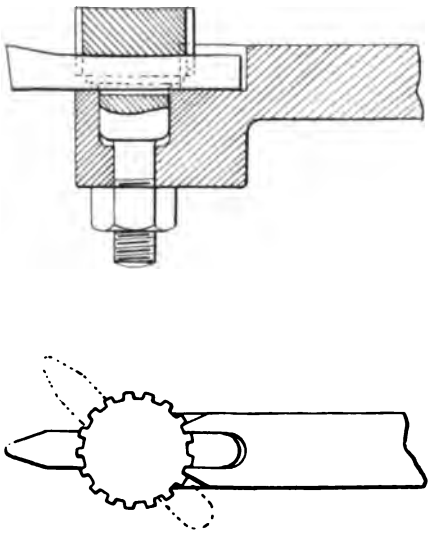

Fig. 467.

shank when turning straightforward. The bolt head is serrated, like a short-toothed pinion in appearance, and horns or projections on the shank of the holder enter into these, steadying the tool

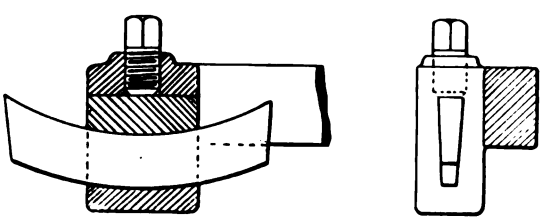

Fig. 468.

under heavy cutting, and affording means for setting it at right and left hand angles. The bolt is disengaged by slackening back the nut sufficiently to enable the bolt to be lifted clear of the horns on the shank.

Numerous attempts have been made to grip curved tools in holders. Fig. 468 shows one design of this kind. The shank is either made round, to fit a hole in a turret, or square for a slide

Fig. 469.

rest. The head is pierced to receive a cutter slightly vee'd in section, which is pinched by a set-screw pressing on a curved washer or packing piece. The latter may be placed alternatively

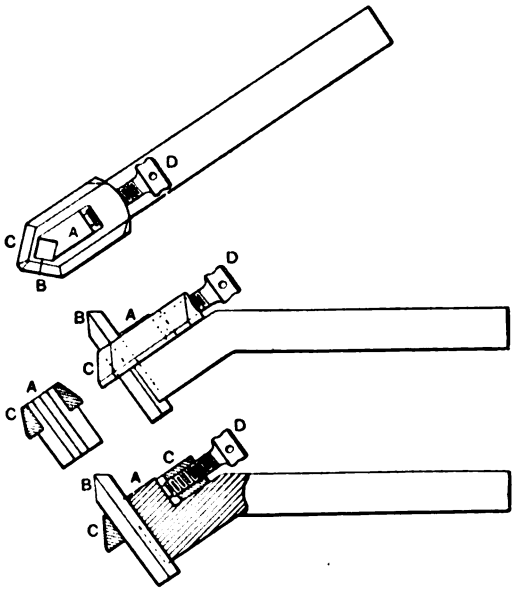

Fig. 470.

below, and a straight tool used above. Such a design permits of wide variations in the tool angles without the sacrifice of simplicity.

The invention of the disc form of cutter (Fig. 469) marked a

decided advance in cutting tools. The top rake only has to be ground and sharpened, and this can be easily altered to suit different metals. The circular cutter is adaptable to straightforward turning and to diagonal cutting or boring. In the original design the cutters were not only held with a bolt, but a wedge-shape block or bar was pressed against the back of the cutter to adjust the height of the cutting edge. Three holes were made in the disc, out of centre, to permit of utilising all the circumference as grinding proceeded.

There is a holder—the Haydon (Fig. 470)—which possesses some interest from the fact that it is adapted to tool points formed of prismatic section, giving what are termed double edges, one leading for cutting the shaving thickness, the other following for

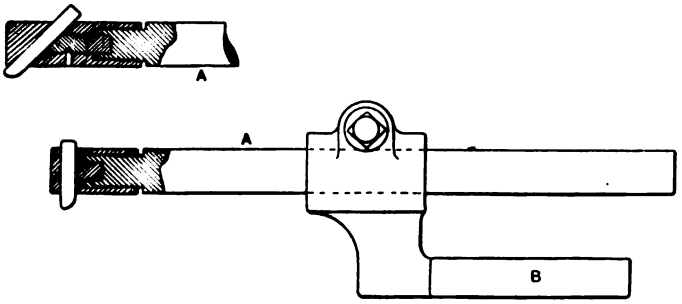

Fig. 471.

severing it by its edge. It is a good holder where heavy slogging is not attempted. But the overhang of the cranked end is objectionable, as is also the limited capacity of the tool point.

The shank of the bar is bent, so that the longitudinal axis of the cutter makes an angle of 55° with the horizontal—done with the object of getting good average cutting and clearance angles. The boss piece A is forged solidly with the bar, and the tool point B is pinched between this and the strap or sling C by the screw D. The view seen to the left of the middle figure is a section through the strap and against the vee-grooved face of the end of the bar, the tool being removed.

We now note some miscellaneous holders. Fig. 471 shows the Armstrong boring holder, intended specially for small tool points of Mushet steel. Its value lies at its extensibility, the

round holder A being gripped in a split holder B, which is clamped in a tool post or on the rest. Provision is made for boring with cutters at right angles, and at an angle of 45°, effected by changing the caps, the one in the upper figure being substituted for that in the lower. The tools shown are those used for boring, but screw-thread tools, or vee, square, or other sections, can be fitted in the same holders.

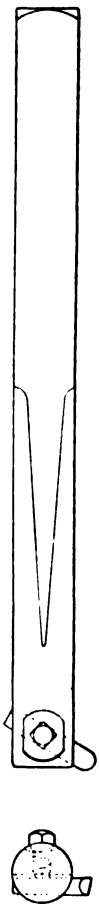

Fig. 472.

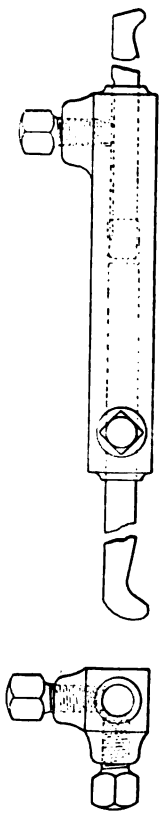

Fig. 473.

Figs. 472 and 473 show boring tool holders by Mr Charles Taylor, of Birmingham, the first for large, and the second for small holes. The first has a solid shank carrying a small cutter pinched in a hole bored at an angle for lead. The second has a hollow shank into which the cutters fit, one at each end. These are of round steel, the ends of which are bent by the smith. A feature of value is that the sleeve design permits of longitudinal adjustment of the cutting tools, so avoiding the necessity for having numerous tools to suit holes of different depths.

A new screw-cutting tool holder is shown by Fig. 474, a recommendation of which is that it can be used in a non-screw-cutting lathe. It comprises a hollow bar A, with a square shank for clamping in the rest. The hole is bored eccentrically in the bar, and receives the holder B in A, the end C being turned smaller than B, and eccentrically with that. The cap nut D, with a buttress thread, revolves on the end of A, and is driven by the lever E from a driver fixed to the face plate or other convenient locality. D imparts motion to the tool holder B by means of a steel follower H

inserted in the bar; J is a feather which serves to steady the tool bar while cutting. The handle F, coming from B through a slot in A, is used to stop the tool and return it to the starting point for a fresh cut. G is an adjustable stop for regulating the length of

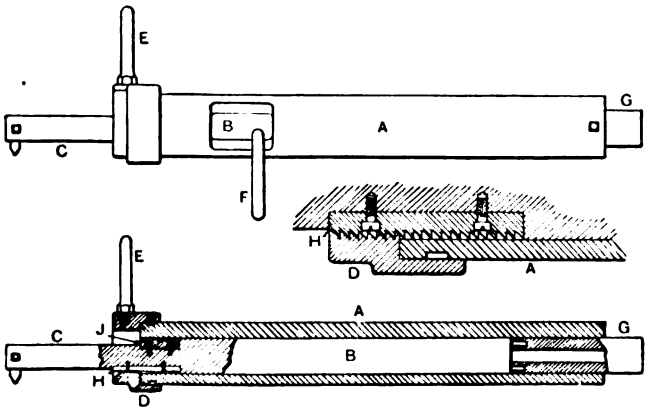

Fig. 474.

movement. Taper holes can be threaded by clamping the bar in the rest at an angle.

Figs. 475 to 479 illustrate a tool holder for screw-cutting, by Mr Charles Taylor. Figs. 475, 476, and 477 show the body or

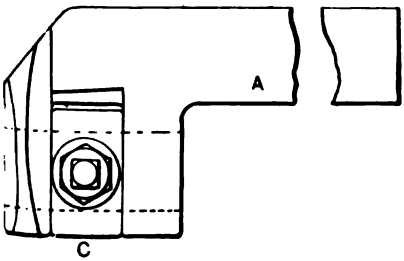

Fig. 475.

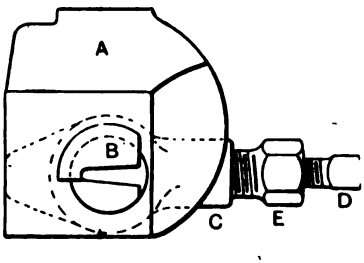

Fig. 476.

outer holder in plan, side, and front elevations respectively, marked A in the figures. The head, or end, of the holder, it will be noted, has two bosses to one side, bored to receive a barrel B (Fig. 478), in which the tool, of vee section, is clamped. This is effected by

tightening the barrel holder C (Fig. 479). The latter, or loop piece, is clamped by the screw D, and the large screw E, through

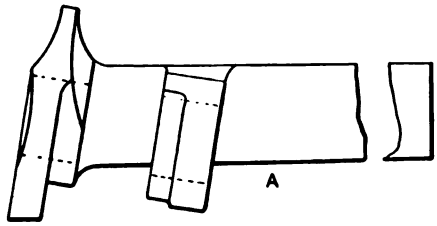

Fig. 477.

which *a* passes, holds the barrel with its cutter at the required angle to suit threads of different degrees of inclination.

The value of the holder lies in this, that since the cutters can be swivelled by the movement of the barrel (Fig. 478) and its contained tool in its seatings, a single vee-shaped cutter will cut all vee threads, whether right or left, and of any diameter, and all square threads of the same width. Moreover, as the screws which hold the cutter and its barrel are distinct, the cutter can be taken out for grinding by loosening its screw, without slackening that which clamps the barrel at its angle.

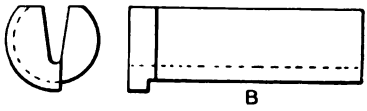

Fig. 478.

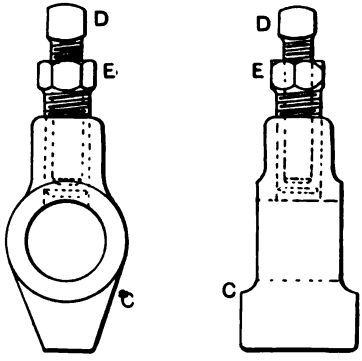

Fig. 479.

The Armstrong threading tool holder (Fig. 480) has its cutter shaped to the section of the Whitworth or other thread, and therefore only has to be ground on its top face. The back of the cutter is eccentric, and bears against a hardened stop screw A, working in a boss B at the side of the shank. The height of the cutting edge can be delicately adjusted by moving this screw, and the cutter then tightened up by the main screw.

The Pratt & Whitney threading tool holder is shown in Fig. 481. The cutter is coerced by a tongue and groove, and its height is adjusted by the grub screw, working in a segmental thread

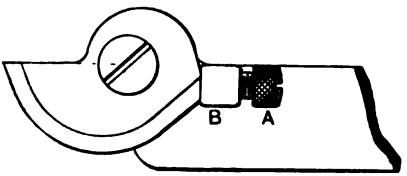

Fig. 480.

on the corner of the cutter. The latter is then clamped by the bolt and loose clamping plate.

A double knurling tool mounted in a holder (Fig. 482) completes our examples.

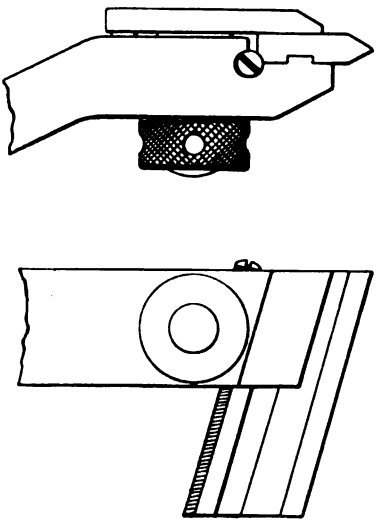

Fig. 481.

We have not exhausted the holders, for they form a very much larger group than some might suspect.

The subject of simplification in tool angles is of great importance in the design of holders. Those have the least chance

of survival in which the grinding operations done on solid tools have to be performed on the tool points. Accordingly we find that nearly all successful holders belong to types in which one facet only of the tool point has to be ground. This excludes at once all double-edged tools. And so the majority of tool holders in use fall under two heads—one, that in which the top rake is fixed; the other, that in which the front rake or clearance is embodied. Though neither system is elastic in the sense of permitting of variations in the fixed angles, yet the convenience of the design more than outweighs any such supposed disadvantage, the term supposed being used advisedly, because holders have been in use for very many years in our shops in which one or other of the angles named above has been embodied in permanence.

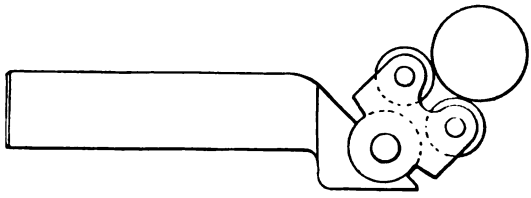

Fig. 482.

On the whole it seems better to fix the front rake or clearance angle than the top rake. There is far less advantage to be gained by effecting any variation in the first named than in the second. The latter should be different in hard and soft metals; in cast iron, mild steel, and brass, the former need not vary at all, though it often does, being greater in working soft than in hard materials. Hence it is generally desirable to fix the front clearance in the holder, and to vary the top rake by grinding a simple facet. Unfortunately this design requires that the tool point shall be set a few degrees only from the vertical, and it is then difficult to make the holder strong yet snug enough to clear the work. It has been done, however, and these designs have proved very useful holders in the shops. But many of the other forms seem equally good, since other things come in, as lubrication, good support, convenience, &c., to modify results.

CHAPTER XVIII.

Speeds and Feeds: Tool Steels.

The Relations of Speeds, Depths of Cut, and Feeds—Average Rates—Influence of Chatter—And of Lubrication—Tool Steels—Carbon Steels—Mushet Steel—The High-speed Steels—Taylor-White—Chemical Composition—Cost—Early Troubles Incidental to Re-forging—The High Temperature Necessary—Cooling—Endurance—Probable Mode of Action—Economy of High-speed Tools—Working on Cast Iron—Examples—And on Mild Steel—The Manchester Experiments—Practical Deductions—The Economy of Slow and Heavy Cutting—Power Absorbed—Armstrong-Whitworth Experiments—Examples of Very Heavy Cutting—Mr Miley's Experiments—Speed of Cutting and Area of Cut—Cutting Angles—Round-nosed Tools—Comparisons between Ordinary Carbon Tool Steel, Mushet, and High-speed ditto—Endurance Tests on—Intensity of Pressure—Endurance of Tools—Weight of Cuttings Removed—Mr Norris's Experiments—Deductions from—Economy of Two Cutting Edges—Dr Nicolson's Experiments with a Dynamometer—Area of Cut, and Cutting Force—Form of Tool Used—Annealing a Valuable Property of High-speed Steels—Remarkable Drilling—The Effect of the New Steels on Lathe Work—Groups of Cuttings—Remarks on.

THE problem of speeds, depths of cut, and feeds cannot be settled in a summary fashion, because of differences in texture of metals, and alloys normally the same, but which differ widely in their characteristics, and because of differences in tool steel, tool shapes, and in the amount and method of lubrication. To a certain extent these stand in inverse relations. But some work cannot possibly be tooled at a high speed, and then slow cutting, with deep cuts, and coarse feeds must be done. The speeds for the old carbon tools are generally given as follows:—Cast iron, turned at from 15 ft. to 20 ft. a minute; steels from 15 ft. to 30 ft.; wrought iron from 25 ft. to 40 ft. a minute; while brass is turned at from 40 ft. to 100 ft. But no rule can be laid down, which can be of universal application. A good deal also depends on what the machines themselves will

stand, inasmuch as a stiff, well-designed, and well-fitted machine, free from chatter, is capable of sustaining a feed twice as coarse as a machine possessing opposite characteristics. Speaking generally, using the carbon steels, depths of cut range from $\frac{1}{64}$ in. to $\frac{3}{4}$ in., or 1 in., and feeds from $\frac{1}{32}$ in. to $\frac{1}{8}$ in. The feed is stated as length of traverse per single revolution. These average rates are exceeded in the high-speed tools, examples of which occur in succeeding pages.

An important point is, that other conditions remaining the same, increase in one involves diminution in the other. Hence it is not yet possible to reduce the question of speeds and feeds to formulæ, or tables. Each class of job must be settled by itself in the practice of a given shop. Much uniformity rules in shops, because most lathes are so ill adapted for rapid changes of speeds and feeds. A fundamental truth is that to remove a large quantity of metal quickly it is economical to reduce speed and increase feed; while to finish rapidly, speed should be increased, and feed reduced.

Chatter is perhaps as great an obstacle to the full efficiency of cutting tools as any other condition, so that it is impossible to feed a tool coarsely if it chatters. This is noticeable in the fixing of the tool, as well as the degree of rigidity possessed by the tool holder, or the lathe framing. Thus a tool with much overhang will chatter, hence the need of good support close up to the cutting edge. Anything that reduces vibration reduces chatter, as hanging a weight on the tail end of a tool in a lathe, or putting a wooden prop under a tool having much overhang, which cannot be avoided, are common shop devices for reducing chatter and increasing the efficiency of the tools.

Lubrication is now done more efficiently than hitherto, and the result is seen in the increased output. Speeds are not usually increased for tools of carbon steel, but deeper cuts, or feeds, or both are the result of better lubrication. Water, the employment of which was nearly universal, except for drilling and screwing, has given place in turret work and many plain turning lathes, to oil—lard oil is the most advanced—with great advantages in point of efficiency of cutting (besides the better finish of surface produced). When the oil is under pressure, the efficiency is still further increased, and this marks the last economy in this line—the use of the best oil under high pressure applied to the work at

the point of operation of the cutting tool or tools. It is used in tools for turning all metals and alloys without distinction, cast iron alone being usually excepted, though not always in turret, and screw machine work, to which pressure pipes are fitted.

The materials of which the tools employed by the metal turner are made may be broadly classed as common high-carbon steels, Mushet steel, and high-speed steels. The difference in these, without for the moment taking account of their chemical composition, is this:—The first-named requires to be hardened and tempered; the second is hardened in air, with or without tempering. The difference as regards cutting capacity is that the first is suitable for cutting all metals and alloys without exception, at various speeds, within a moderate range. Its capacity in this respect is only limited by such conditions as the quality of the material being cut, the depth of cut, and coarseness of feed, the lubrication, the degree of support afforded to the tools, and the nature of the work. The second, the Mushet, is specially used for cutting the harder steels, which soon damage the edges of ordinary tempered tools. The place of the third, the high-speed steels, lies chiefly in the heavy roughing down of work in steel; in a less degree in cast iron; while in finishing cuts they have little advantage over the high-carbon steels.

The steel manufacturer specialises tempers of steels exactly suited to the kind of tool required. No. 2 temper, containing about 1.5 per cent. of carbon, is that usually supplied for lathe tools. Turning tools are hardened first, and then let down to a purple or plum colour, at which they are quenched for temper.

The first departure from the "temper" or carbon steel was made by Mushet, who melted the mineral wolframite with steel, which gave certain regular percentages of tungsten, and manganese. The steel so produced had the property of being "self-hardening"—that is of requiring no heating, and subsequent cooling in water to induce hardness. It was also able to withstand the heat developed by friction in cutting, and the product, known as "Mushet," has long been in use, and valued in turning tough and refractory metals and alloys. Manganese gives this steel its self-hardening property. Langley found that steel high in carbon, containing about 4 per cent. tungsten, and minute quantities of manganese had no self-hardening property, and that the same steel remelted so as to contain 3 per cent. manganese, became an

excellent self-hardening steel. Langley explains that tungsten is the element which holds the carbon in solution, giving this steel its most valuable property, that of remaining hard at a comparatively high temperature. A tool made of it can be used for cutting at a high speed, operating efficiently at a temperature, due to the enormous friction of the high speed, that would soften and render useless the best carbon steel tool made. Mushet steel is now being pressed hardly by the high-speed steels.

The high-speed steel was first introduced to the public at the Paris Exhibition of 1900. At the stand of the Bethlehem Steel Co. at Vincennes, a lathe of about 30 in. centre carried a piece of work of 20 in. diameter, on which cutting was being done at 145 ft. per minute, the depth of cut being $\frac{3}{16}$ in., the feed $\frac{1}{16}$ in., and 5.8 lbs. of cuttings were removed per minute, the tool enduring 20 minutes. The mild steel being turned contained the following percentages:—Carbon, 2.2 per cent.; silicon, .054 per cent.; manganese, .222 per cent.

In order to provide an air-hardening steel suitable for treatment, it was found necessary that it should be compounded with chromium in the proportion of at least one-half of 1 per cent., and another, or others of the commercially available members of the chromium group in the proportion of at least 1 per cent.—that is with either tungsten, or molybdenum, or a mixture of tungsten and molybdenum in the proportion of at least 1 per cent. It was found that to produce a markedly beneficial result from the treatment, it was necessary to use at least one-half of 1 per cent. of chromium in combination with at least 1 per cent. of tungsten, or molybdenum or a mixture of these, and that materially better results were secured where chromium is present in the proportion of 1 or more per cent., and tungsten in the proportion of 4 or more per cent.; or, in the alternative, molybdenum present in the proportion of 2 or more per cent., or again, tungsten present in the proportion of 2 per cent. or over, together with molybdenum in the proportion of 1 per cent. or over. Experiments showed that with respect to the cutting speed of the tool, molybdenum replaced tungsten in the proportion of about one to two, though it is proper to note that in other respects tungsten steels were preferable. There was no material difference in the cutting speed of the tool in cases where the chromium and tungsten, or molybdenum were used in excess of the percentage given.

The carbon contents of the steels used were not found to be a material factor. A steel composition to give excellent results when treated by the new method was when the iron was associated with the following percentages of other ingredients, as follows:—Carbon, 1.85; chromium, 2; tungsten, 8.50; manganese, 0.15; silicon, 0.15; phosphorus, 0.025; sulphur, 0.030. In steels containing $1\frac{1}{2}$ per cent. of chromium and $\frac{7}{10}$ths per cent. of carbide of chromium, the tool after treatment contained but $\frac{2}{10}$ths per cent. of carbide of chromium, and in steels containing $3\frac{3}{4}$ per cent. of chromium, and $\frac{9}{10}$ths per cent. of carbide of chromium, the treated tool contained but $\frac{3}{10}$ths per cent. of carbide of chromium.

Steel makers have since produced many similar steels as the result of experimenting. There are dozens of different brands. The analyses of three of the leading brands are given below.

	Per cent.	Per cent.
Tungsten	9.99	18.48
Chromium	2.83	2.90
Carbon	0.69	0.78
Phosphorus	0.010	Not Determined
Sulphur	0.010	Not Determined
Silicon	Trace	Not Determined
Manganese	Trace	0.33
Molybdenum		9.65
Chromium		
Carbon		0.66
Phosphorus		0.016
Silicon		0.046
Manganese		0.22

Manganese is thus in the later steels reduced to a mere trace. The steel maker now has at his command, ferro-manganese, ferro-silicon, ferro-tungsten, ferro-molybdenum, ferro-vanadium, and ferro-titanium. These alloys are mostly expensive, which explains the high prices of the new steels. Thus vanadium costs 40s. per lb., molybdenum 6s., tungsten 2s. 6d., and nickel 1s. 6d. The dodge of brazing pieces of high-speed steel on to machine steel to lessen the cost of the tools, has been tried.

A large variety of combinations of iron and carbon with tungsten, chromium, manganese, nickel, silicon, and molybdenum characterise the special steels to-day. Makers furnish, besides the regular carbon steel, a self-hardening steel, and an intermediate grade which is capable of being hardened in water without

cracking, and suited for extremely hard cutting. The self-hardening steels cannot be brought into contact with water while hot on account of the danger of cracking. Some of the milder grades rely on the assistance of an air blast after forging to give them the proper degree of hardness for their work, and are called "air-hardening steels."

One trouble with the early high-speed steels which for some time militated against their use, was that it was necessary to return the tools to the makers as often as they required to be re-forged. A steel which could easily be rehardened was therefore desirable. Experiments were made by hardening in lead, hot sand, boiling water, and finally in an air blast. The latter solved the difficulty, since there was no danger of the steel cracking by this method, and these steels are now generally distinguished by the term air-hardening, and machines are made for directing a blast of air upon them.

The most remarkable thing about these steels is that they are re-forged at a white, or welding heat, which is ruinous to ordinary steels. To be precise, while carbon steels would be ruined if forged at a temperature higher than 1,500° or 1,600° Fahr., the new high-speed steels must be raised to a temperature of 2,200° or 2,300° Fahr., at which pig iron melts. After it has been re-forged to the required shape, it is reheated to a welding heat, so that fusion of the point occurs, and then it is cooled in an air blast, or simply laid down in a dry place to cool. And it is necessary to attain this temperature, for if it falls to that which is necessary for water-hardened steels, the tool will make no impression. Manufacturers give specific directions for the treatment of their steels, and some variations in these (see pp. 392-396). But this is due to differences in composition, which however renders different brands better for some classes of work than others.

The fact that the new steels have to be forged at a white heat is helpful to the smith, because they are easy to work by comparison with the ordinary steels, which cannot be overheated with impunity. A thicker scale forms on high-speed tools than on water-hardened steels. It is necessary to grind this off.

Tools made of high-speed steels will endure a good deal of work before they lose their edges. Mr Borcheiding used a tool of ordinary roughing shape (Fig. 483), which was ground down successively until it reached the shape indicated by the dotted

lines, without re-forging. And the curious thing is that the tools are most efficient when they become quite hot. In fact, it has been stated that at the Bethlehem works, the home of the Taylor-White steel, they judge whether a lathe is running at a suitable speed by the smoke coming from the tool; if there is no smoke it is not working to the full efficiency! But the most efficient speeds must stop short of the ruin of the tool edges.

The action of the high-speed steels is obvious, the reasons for the same are rather obscure. As the main feature by which they are characterised is that they operate best at a high temperature, corresponding with a red heat, the following explanation which has been offered appears probable.

The high-speed steels differ from both Mushet, which most nearly resembles them, and from carbon water-hardening steels in the presence of variable proportions of vanadium, molybdenum, chromium, tungsten, or nickel, and which it is believed form extremely hard combinations with the carbon, and as crystals of carbides embedded in the softer iron carbide that forms the body of the tool, become the true cutting points. These are stable at the higher temperatures, while the iron carbide—their matrix—becomes unstable. The latter is worn away, leaving the needles of the harder materials in relief. This theory helps to explain the tearing action of the cut, and also the rapid wear of the top rake of the tools due to the friction of the cuttings.

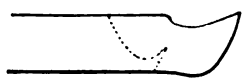

Fig. 483.

The high-speed steels do not make quite so good a show on cast iron as they do on mild steel. But they effect an economy of about 100 per cent. in turning cast iron over the ordinary carbon steels. At Messrs Armstrong, Whitworth, & Co. Ltd. works at Manchester some remarkable work has been done on cast iron on vertical boring mills. In one case a cast-iron ring was turned at 40 ft. per minute with a depth of cut of 1 inch, and a feed of $\frac{3}{16}$ths inch. The tool working for $5\frac{1}{2}$ hours before regrinding, removed a total of 7,722 lbs., nearly $3\frac{1}{2}$ tons.

Another case was that of a large drum 12 ft. diameter by 5 ft. wide, giving a surface of $188\frac{1}{2}$ sq. ft. machined with one tool without re-grinding in $10\frac{1}{2}$ hours, a job that previously took 40 hours, with ordinary steel.

By the use of the same steel in another works a fly wheel 5 ft. 2 in. diameter, by 14 in. wide, was turned in 45 minutes. The cutting speed was 65 ft. per minute, the depth of cut $\frac{5}{16}$ in. and the feed 12 per inch, the tool not being reground.

Consistently with endurance in doing heavy cutting on cast iron, a speed of 45 ft. per minute is on an average found to give the best results. Light cutting can be done up to 70 or 100 ft. per minute. On steel the best results are obtained at a surface speed not generally exceeding about 170 ft. per minute, and generally considerably less. The less carbon in the steel being cut, the higher the rate possible. As the depth of cut and feeds increase the speeds should be slightly reduced, though not to the same extent as when using ordinary tool steels. The use of water makes little difference—less than 10 per cent. efficiency, not sufficient to be remarkable. If scale has to be removed, the speed must be much lower than that at which clean metal can be cut. If a tool is found to require frequent regrinding, the speed must be reduced. The great economy of these steels lies in roughing down, since the ordinary tool steels are capable of finishing at high speeds.

Mild steel is used far more than any other material in the shops, iron castings alone excepted, and the high-speed steels score here; they become of especial value as forgings increase in size, because these are not made closely to dimensions, often containing allowances from $\frac{1}{2}$ in. to 1 in. in places for turning, being produced under the steam hammer, or by hand methods on the anvil. They are of value also in long shafts, where long and rapid traverses can be taken, and for repetitive work on smaller pieces, where large quantities are roughed down in sets, and in other cases that might be instanced.

A valuable series of experiments was made at the Manchester Municipal School of Technology in 1902-3 on the work of high-speed steels, supplied by eight British firms. The experiments included lathe work only, and only certain aspects of that, but the information gained was very valuable.

The points which it was desired to elucidate included the determination of the weight of material removed, the area tooled, the cutting speed, depth of cut, traverse per revolution, endurance of tools, the power absorbed, and the results as affected by the chemical composition of the steels operated on. The shapes of

the tools and their height in reference to the centre of the lathe were also noted. The tool angles were left to be settled by the manufacturers of the steels, with a view to obtain the results which might accord best with their own experience. Various recommendations were invited from the competitors bearing on the problem of maximum efficiency. The materials selected were steel, and cast iron, each being of three grades, soft, medium, and hard. The trials were made on an Armstrong-Whitworth lathe, and a representative of each steel-making firm was present at the trial of the firm's steel.

The steels operated on contained the following average percentages of carbon :—

	Per cent.
Soft	0.2
Medium	0.3
Hard	0.5

The cast-iron grades were those understood commercially.

Four series of trials were made on each of the six grades of material to ascertain the maximum cutting speeds with the following depths of cut and traverse :—

Series.	Cut.	Traverse.
1	$\frac{3}{8}$	$\frac{1}{8}$
2	$\frac{3}{16}$	$\frac{1}{8}$
3	$\frac{3}{16}$	$\frac{1}{16}$
4	$\frac{1}{16}$	$\frac{1}{16}$

The periods of these were limited, ranging from 20 minutes to 60 minutes in different cases.

Besides these, endurance tests were made, and comparison tests with Mushet steel, and water-hardened steel.

Apart from the valuable knowledge gained thus in reference to the capacities of the high-speed steels there are some facts of much interest to the turner, interesting because they afford exact demonstration of what has generally been believed in the shops.

The results which were obtained show in a remarkably striking manner the greater economy of slow and heavy cutting over rapid and light cuts. $\frac{3}{8}$-in. cuts, with $\frac{1}{8}$-in. traverse were taken at speeds roughly of from one-third to one-half those of $\frac{1}{16}$-in. cuts by $\frac{1}{16}$-in. traverse. But about four times the weight of material was removed in the former trials than in the latter. This is shown

graphically in Fig. 484, and it is so important from the turner's point of view that the words of the report are here given :—

"It further appears that heavy cuts will be more economical in power; for the waste work is a much larger proportion of the whole work required at light cuts than at heavy cuts. It is probably this fact which has given rise to the commonly accepted opinion that the cutting stress increases with the speed (as instanced by the objections of workmen to increase cutting speeds on account of the anticipated springing of the work), contrary to the results of these trials, which rather show the reverse to be the case. In soft steel, for example, the average horse-power required for actual cutting at $\frac{1}{16}$ in. by $\frac{1}{16}$ in. was 3, whilst at $\frac{3}{8}$ in. by $\frac{1}{8}$ in. it was 15. The friction horse-power of lathe and countershaft was about $2\frac{1}{2}$ horse-power. The weight removed was about 105 lbs. and 445 lbs. per hour at the light and heavy cuts respectively, so that the weight removed per gross horse-power hour was 19.1 lbs. for the light, and 25.3 lbs. for the heavy cut. Neglecting frictional loss, these figures would have been 35 and 29 respectively.

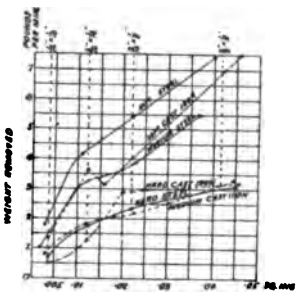

Fig. 484.

"In the case of cast iron, the gain in power at the heavier cuts is still more conspicuous. Here the effective horse-power was 1.7 and 5.5 at the $\frac{1}{16}$ by $\frac{1}{16}$ and $\frac{3}{8}$ by $\frac{1}{8}$ cuts respectively, the waste horse-power being about 2. The weights removed were 42 lbs. and 198 lbs. per hour (as seen in Fig. 484), and the weights per horse-power hour were therefore: 11.35 lbs. at the light cut, and 26.5 lbs. at the heavy cut.

"These results are of general application, and show that not merely can more material be removed in a given time with a heavy cut at its proper speed than with a light cut at the highest speed which the new steels can take, but that this can be done at a smaller expenditure of gross power per ton of shavings removed."

In some experiments by Mr Miley it was found that at a cutting speed of 100 ft. per minute, only about one half the weight of cuttings was removed as at 45 ft. per minute. At the latter

speed, with a $\frac{3}{8}$-in. cut, and $\frac{1}{8}$-in. feed, 7 lbs. per minute were taken off mild forgings; at 100 feet with a $\frac{3}{16}$-in. cut, and $\frac{1}{16}$-in. feed, 3.9 lbs. per minute.

Some experiments carried out at the Manchester works of Armstrong, Whitworth, & Co. Ltd., with high-speed tools working on fluid compressed steel, proved that coarse feeds are more economical of power than fine ones, and are the chief source of economy in making comparisons of cutting tools. After these came the economy of increasing depth of cut. Lastly, increasing the speed of cut, though it shows economies over slower cutting speeds, is not so pronounced as the two features of increasing traverse, and increasing depth of cut, which are very marked.

Some other experiments at this firm confirmed these facts in a striking manner. One piece of work was turned at a cutting speed of 50 ft. per minute, with $\frac{1}{4}$-in. depth of cut, and feed of 4 per inch, equal to 625 lbs. of metal removed per hour or 10.4 lbs. per minute. The tool was red hot. The cut was then increased to $\frac{3}{8}$ in. deep, and the feed to $\frac{3}{8}$ in., but the speed was reduced to 30 ft. per minute. Then the amount removed was 844 lbs. per hour, or 14 lbs. per minute, the lathe apparently driving one as easily as the other. This affords another clear proof of the economy of using a deep cut and coarse feed, and reduced speed when slogging is attempted.

Mr Miley gives the following illustrations to show how extra power is swallowed up in heavy cutting.

A 12-in. centre lathe, motor driven by a horizontal link belt 5 in. wide, the motor making 1,000 revolutions per minute, absorbed $6\frac{1}{2}$ HP. with the work rotated between centres, and the sliding feed in, but without the tool touching the surface. When cutting at 72 ft. per minute, with a $\frac{1}{4}$-in. cut, and $\frac{1}{12}$-in. traverse, 5 lbs. of cuttings were removed per minute, and 13 HP. absorbed, $6\frac{1}{2}$ of which drove the lathe and $6\frac{1}{2}$ removed the cuttings. Increasing the depth of cut to $\frac{3}{8}$ in., 7 lbs. per minute were removed, but the HP. ran up to 20, showing 7 HP. extra for the extra 2 lbs. of cuttings.

From the Manchester tests approximate formulæ were deduced for the relations between speed of cutting, and area of cut.

Let v = cutting speed in feet per minute, and a = area of cut in square inches (product of cut and traverse).

Then :—

For soft steel $v = \frac{1.943}{a + 0.011} + 14.$

For medium steel $v = \frac{1.823}{a + 0.016} + 5.$

For hard steel $v = \frac{1.77}{a + 0.027} - 5.$

For cast iron the results are not of so simple a character; but the following linear expressions give speeds which may probably be attained as a maximum :—

For soft cast iron $v = 115 - 13a.$
For medium cast iron $v = 63 - 858a$
For hard cast iron $v = 40 - 400a.$

A fact that came out in the Manchester experiments was that cutting angles, and the angles related thereto, are not of a hard and fast character, though these do in the main accord fairly well with ordinary shop practice, in which cutting angles range from 60°, to over 70° for soft steel, from about 70° to 80° for soft cast iron. There are very wide variations in front clearance, just as one finds in the shops, a few being as low as 5°, others ranging to 16°, and 18°; 10° to 12° is about the most frequent. Front top rake does not vary so much as one would expect it to do for different materials. In tools turning soft steel, an example occurs so low as 7° 25′, and one is as high as 29° 54′. In turning hard cast iron the lowest is 5° 42′, the highest is 18° 7′. Another point of interest is that the tools used were of the round-nosed roughing type, cutting circle arcs. In the heavy trials the width of the arc in operation, and therefore the width of the shaving was from $\frac{5}{8}$ in. to $\frac{3}{4}$ in. wide. In the light cuts it was from $\frac{1}{8}$ in. to $\frac{1}{4}$ in.

When the experiments were being made at Manchester some others were made with ordinary steel tools, water-hardened, and Mushet. They are valuable as affording a guide to turners, for they demonstrated the following facts :—

Ordinary water-hardened steel reached its limit operating on Whitworth fluid-compressed steel at about 30 ft. a minute, if cutting $\frac{1}{16}$ in. deep, and feeding $\frac{1}{16}$ in. But an ordinary Mushet tool will cut at 35 ft. on a $\frac{3}{16}$-in. cut, and a $\frac{1}{16}$-in. feed. On

medium cast iron ordinary tools failed as follows:—At 24.6 ft. a minute with $\frac{1}{16}$-in. by $\frac{1}{16}$-in. cuts, at 17 ft. 6 in. with $\frac{3}{16}$-in. by $\frac{1}{16}$-in. cuts; and at $15\frac{1}{2}$ ft. with $\frac{3}{16}$-in. by $\frac{1}{8}$-in. cuts. But ordinary Mushet stood for $20\frac{1}{2}$ minutes with a speed of 23.6 ft. on a cut of $\frac{1}{16}$ in., and a feed of $\frac{1}{16}$ in. It failed at 19 ft. on a cut of $\frac{3}{16}$ in., and feed of $\frac{1}{16}$ in., and at 15 ft. on a cut of $\frac{3}{16}$ in., and feed of $\frac{1}{8}$ in. Turning soft cast iron, 22 ft. was too high for ordinary steel, on a $\frac{3}{16}$-in. cut, with $\frac{1}{8}$-in. traverse, while a Mushet tool stood for half an hour on a speed of 31 ft. 6 in. per minute with a similar cut and feed.

It was found that using high-speed steels, a speed of 90 ft. a minute can be maintained for a considerable period, on a $\frac{3}{16}$-in. cut, and $\frac{1}{16}$-in. traverse upon mild steel. Also that the high-speed steels will cut more than twice as fast as ordinary Mushet, and more than four times as fast as ordinary water-hardened steel. Used on medium cast iron no tool ran for longer than an hour at 34 ft. a minute, with a $\frac{3}{16}$-in. by $\frac{1}{16}$-in. cut and traverse. A Mushet tool ran for an hour at $19\frac{1}{2}$ ft. per minute, but ordinary water-hardened tools failed in from 4 to 9 minutes at 12 ft. per minute.

A striking illustration of the intensity of pressure exercised by the cuttings from high-speed steels taking heavy cuts is seen in their abrasive effect on the top face of the tools. The result is that the top rake becomes altered in consequence of friction of the chips. In some experiments this is more marked than in others but it is present in some degree in most, amounting to several degrees of alteration in the tool angle when the cutting was finished.

But the tools endure the enormous pressure without failing, a remarkable example of which is the following:—An Armstrong-Whitworth tool of $1\frac{1}{4}$-in. square section cutting on a steel forging at a speed of 25 ft. per minute with $\frac{7}{16}$-in. depth of cut, and feed of $\frac{3}{8}$ in. per revolution, removing $14\frac{1}{4}$ lbs. of metal per minute, or 855 lbs. in an hour, showed no signs of weakness.

The value of a tool is not determined by its maximum capacity, working for 10 or 20 minutes, or even for a couple of hours, but that of endurance, plus capacity. Tools are generally required to stand several hours of duty without being taken out for regrinding. In some cases the period is extended to several days, as in boring big cylinders, turning long shafts, and in turret work. So that although the makers of tool steels are naturally as

desirous as their customers to ascertain how much the tools will stand before failure, in practice the longer service and endurance takes precedence.

The utility of the high-speed steels is estimated and stated by the rates in feet cut per minute, and by the quantity of material removed in a given time. The first named is not quite so convincing as the second, since the rate in feet is largely a question of cut and feed, which require to be stated. But the quantities of material removed are more striking. In fact, these are so great, that it seems better to give them in terms of per minute, than per hour. It has been humorously suggested that one of the problems which will have to be met with as the use of high speed tools becomes universal, is some automatic device for conveying the chips away from the machines. There is nothing far fetched in this either when two or three tons are removed in a day. We have heard the case of a shop instanced where the fitters have had to work overtime to keep up with the machine shop since the high-speed tools have been introduced. It has been estimated that 1 lb. of cuttings per minute may be stated as the maximum capacity of a 12-in. centre lathe, using a single tool of ordinary tempered steel. But a 12-in. centre lathe turning a shaft $5\frac{1}{2}$ in. diameter removed 7 lbs. per minute, operating at a surface speed of 65 ft. per minute, depth of cut $\frac{3}{8}$ in., and feed $\frac{1}{12}$ in. One tool stood this for 3 hours.

Mr H. M. Norris, of Cincinnati, who made a number of experiments on high-speed tools of Novo steel working on moderate cuts and feeds, arrived at certain results which are of much practical importance, though they are limited to light cutting. These can be summarised without giving the tables on which they are based, as follows:—

On average steels it is inexpedient to operate at a speed greater than 175 ft. per minute, using cuts not exceeding $\frac{1}{8}$ in. in depth, and feeds of $\frac{3}{64}$ in. The tools failed at an average of 230 ft. on such tasks. With lighter cuts and feeds, higher speeds were obtained, an average of $\frac{1}{16}$-in. and $\frac{1}{32}$-in. feeds being 344 ft. per minute at the moment of their failure. The results showed that speed should be decreased with increases in the amount of either depth of cut, or rate of feed, but these amounts were not large in the experiments, and therefore the diminutions of speed found necessary were small.

But the gain of the coarser cuts and feeds is seen in cubic inches of material removed per minute. Adopting $\frac{1}{16}$-in. cuts, and $\frac{1}{64}$-in. feeds, the average of the experiments gave $4\frac{1}{4}$ lbs. per minute removed. Adopting $\frac{1}{8}$-in. cuts, and $\frac{3}{64}$-in. feeds, the average was 16 lbs. removed per minute. Yet the cutting speed per minute for these at the moment of failure was 363 ft., and 230 ft.

Another important fact ascertained was that lubrication is of comparatively little value in high-speed steels, effecting results of less than 10 per cent. Another is that if scale is being removed, the speed of cutting must be greatly reduced, so that pickling should for the sake of economy precede turning. Another is that satisfactory results can be obtained within 9 ft. of the speed at which the tool is ruined, testifying to the necessity of the embodiment of minute speed increments in the driving arrangements.

Experiments have proved that the endurance of a tool is increased by using two separate cutting edges. Thus an ordinary single-edged tool of high-speed steel working on cast iron with $\frac{3}{8}$-in. cut, and $\frac{1}{8}$-in. traverse, lasted 15 minutes, while two tools working under similar conditions lasted 52 minutes. The same principle was embodied in two other tools, one single cutting, the other being ground to produce two edges. The first took $\frac{3}{8}$-in. depth of cut, in the second the work was divided, each edge taking $\frac{3}{16}$ in. The latter cut with greater steadiness, and possessed more endurance. This was considered to be due to the cooling effect of the air in the space between the two edges. From this point of view the employment of three or four tools in series in a planing machine is correct.

Dr Nicolson's experiments with a lathe tool dynamometer were made primarily to determine the forces acting upon a cutting tool, and the best shapes and angles. The conclusions arrived at were that the most durable angles were about 80° for cast iron and 70° for steel, and with these angles the vertical cutting stress is from 76 to 84 tons per sq. in. or area of cut removed. The cutting force is simply proportional to the depth of cut, for a given width of traverse, thus substantiating Hartig's law. Cutting stress varies a good deal with the angle of the tool. It is a minimum for cast iron and steel in the neighbourhood of a 60° cutting angle. But this is by no means the most durable angle, 80° being found the best on the whole. Cutting stress

varies but little with the speed of cutting, either in cast iron or steel. The tools experimented with were of the straight-nosed type (Fig. 485), the cutting edge being horizontal, and in plan in the upper figure at an angle of 45° with the axis of the work, though this angle was varied in different tools. The nose had a clearance angle in plan of not less than 1°, and a small radius was given to the point. The front clearance was 6°. The shaded section represents the area of cut, the sectional figure gives the vertical angle. But the conclusion arrived at was that the round-nose tool best fulfils shop requirements.

A point of value in the high-speed steels is that they can be annealed. These processes of annealing permit self-hardening steel to be as easily machined as the ordinary carbon grades. The high-speed qualities of the steel can thus be utilised for cutters of all kinds, with great saving of time, due to the increased amount of work such tools are capable of turning out. There is no risk of their cracking in hardening, for it is only necessary to heat such a tool to redness and lay it aside to cool, when it will have regained the hardness it possessed before annealing. The practical result is that milling cutters, reamers, twist drills, taps, &c., can be cut and shaped into form. Flat drills of high-speed steel have been found to do nearly as much work as the twist drills of temper steel.

Fig. 485.

At the Armstrong-Whitworth works at Manchester some remarkable drilling has been done. A $\frac{3}{4}$-in. drill was run at 525 revolutions a minute, and penetrated a cast-iron block 4 in. thick in 18 seconds = at the rate of $13\frac{1}{4}$ in. per minute. A $\frac{7}{8}$-in. drill making 525 revolutions went through a 2 in. steel plate in 10 seconds = 12 in. per minute. Mr Lodge has bored $2\frac{1}{8}$-in. holes in lathe spindles 44 in. in length in 58 minutes, and $1\frac{1}{4}$-in. holes in spindles 24 in. long in 18 minutes.

Mr Miley instances the case of a firm making steel tram rails. With ordinary drills of carbon steel, they drill 25 to 30 holes, $1\frac{1}{8}$-in. diameter. But with the new steel 195 holes are drilled without regrinding. Another case instanced is that of the drilling of spring buckles. With a drill of the new steel 210 holes were

drilled $\frac{11}{16}$ in. in diameter, by $\frac{7}{8}$ in. deep, (the drill running at 260 revolutions per minute) without being reground.

In drilling, too, high speeds are more economical than low

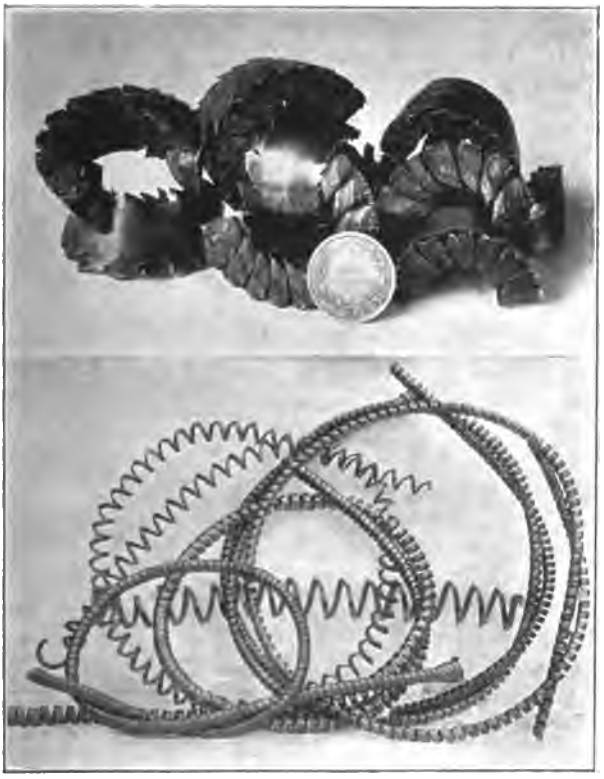

Fig. 486.

Upper Fig.—Speed 50 ft. per minute, $\frac{1}{2}$-in. cut, $\frac{1}{4}$-in. traverse, 34 H.P.
Lower Fig.—Cuttings taken at 100 ft. per minute. By Cammell, Laird, & Co. Ltd., Sheffield.

ones. In drilling mild steel plates 2 in. thick with Armstrong-Whitworth tools at 84 revolutions per minute, the net E.HP. absorbed equalled 1.36 for each inch of depth drilled, but when the speed was increased to 375 revolutions the net E.HP.

absorbed for each inch of depth fell 2.98, equal to a gain of nearly 28 per cent. in favour of the higher speed.

Objection has been made to the use of the high-speed steels on the ground that they double or treble the cost of power to drive the machine tools. But this is a one-sided view, for clearly economy of space and labour more than counterbalances the increased outlay on power. If one lathe with one man using high-speed tools can do the work of three lathes and three men using carbon steel, the economy thus obtained heavily discounts

Fig. 487.

Cuttings taken by Firth's "Speedicut" Steel, with Tool shown in Fig. 488.

the extra cost of power. And after all power is a small item as applied to the driving of machine tools, even of the heavier types. The high-speed steels are changing lathe practice, and the tools now govern the pace of the lathe, instead of being the other way about, and the lathe makers are now compelled to modify designs to enable the tools to perform the maximum duty of which they are capable. What that duty is, is still being made a matter for experimenting.

In the average practice of the turnery heavy cutting is done

with the back gears thrown in, and high speeds are reserved for light cutting, done rapidly. Since the new steels provide for heavy tooling combined with high speeds, greater belt power is employed, and the lathe details are worked out to correspond therewith.

One result is following from the rivalry of high-speed steels, which is that the capabilities of the carbon steels have been found possible of increase. Cases often occur of unusually high

Fig. 488.

rates of turning being accomplished with light cuts, using carbon steels: so that the efficiency of the ordinary lathes and tools will doubtless be increased generally, side by side with that introduced by the new steels.

One of the interesting facts about the high-speed lathes is the tentative character of the developments of which they have been

the object. The capabilities of the new steels have been distrusted, and so firms who have begun by doubling or trebling the duty have gradually made further demands on them. Thus, Messrs Armstrong, Whitworth, & Co. Ltd. altered one of their lathes, speeding up for turning armour plate bolts, at 45 ft. a minute, then to 85 ft., then on another lathe they attempted 152 ft. a minute with success. At this speed a cut $\frac{3}{4}$ in. deep was used, reducing the bolt $1\frac{1}{2}$ in. at a traverse, with a feed of 30 cuts per inch, removing about $12\frac{1}{2}$ lbs. of metal a minute, or nearly 750 lbs. per hour, the tool working thus for 7 hours before requiring to be reground.

A case of 16-in. centre lathe may be instanced, which was first driven with a 17 HP. gas machine for high-speed work, but which proved not powerful enough. In another case a 12-in. centre lathe was fitted with a 10 HP. electric motor, and this had to be replaced with one of 20 HP.

Figs. 486 show two groups of cuttings from a locomotive axle taken at the works of Messrs Cammell, Laird, & Co. Ltd., Sheffield, one set being taken at 50 ft., the other at 100 ft.

Fig. 487 shows a group of cuttings taken off by Firth's "Speedicut" steel, with the tool shown in Fig. 488, the edge being bent over to an angle of 30°. An extract from a letter from the firm is subjoined :—

"In the use of high-speed steels some engineers advocate high cutting speeds with light feeds; our own experience so far goes to show that in the general run of turning shops the greatest economy is got by the use of medium high speeds and rather coarser feeds. There are several arguments in favour of the medium cutting speed and feed against the high speed and fine feed, not the least important being the fact that the operator of a lathe finds it rather a difficult matter to accurately 'size' a piece of work at a high speed; the high speed tends to draw his calipers over, and in all possibility he will find when he stops his machine that his diameters are full. Again, a piece of work of any size revolving in a lathe at a very high speed always gives trouble at the back headstock-centre through friction and consequent heating; further, everything moving so rapidly in front of the operator tends to worry him, and this must be taken into account, because when trade flourishes, the manufacturer in many instances has to employ men who are not quite up to standard.

There is, of course, the exception, and that is when turning small diameters, where there is no doubt very high speeds can be used to great advantage. In the larger grades of work, however, we are inclined to favour medium high speeds and fairly heavy feeds and cuts. As an illustration of this, on one occasion while turning a shaft containing .235 per cent carbon with a $1\frac{1}{4}$-in. square Speedicut tool, 660 lbs. weight of turnings were removed in 30 minutes, the tool being in perfect condition at the finish of the cut. In this case water was used, the cutting speed being 52 feet per minute, depth of cut $1\frac{1}{32}$ in. (reducing diameter $2\frac{1}{16}$ in.), and the feed $\frac{1}{8}$ in. per revolution. From the same forging a 1-in. square Speedicut tool removed with ease 207 lbs. in 30 minutes, and was in perfect condition at the completion of cut, which was run dry. The speed was in this case 51 feet per minute, the depth of cut $\frac{3}{8}$ in., and the feed $\frac{1}{10}$ in. per revolution.

"A very vexed question with engineers is the shape of the tool. We have known experienced turners express the most varied opinions as to the best shapes of tools for identical purposes. We have, however, found that in the case of Firth's Speedicut the best shape of tool for roughing purposes is formed by bending the end of a bar to 30° from the straight (Fig. 488). It is, in our opinion, a mistake to give a tool, which will be asked to take a heavy cut, side rake right up to the cutting edge. We have always noticed in the case of a tool having a feed of about $\frac{1}{16}$ in. there is practically no abrasion. We have also found a tool with a straight-cutting edge and the side rake, or lip, brought to within a short distance from the cutting edge and then continued flat to the cutting edge, to give the best results. The turnings themselves, as soon as the tool is put to work, start to make the top rake right, leaving the portion directly behind the cutting edge alone, and it is not until the tool fails that this goes with the rest. This extra metal at the edge supports and materially increases the life of the cutting edge."

STEEL MAKERS' INSTRUCTIONS.

SAMUEL OSBORN & CO., SHEFFIELD.

Instructions for Working Mushet High-Speed Steel.

When forged, the cutting end of the tool should be reheated to a white heat, and then immediately blown cold.

Whilst hot this steel must be kept from water.

SIR W. G. ARMSTRONG, WHITWORTH, & CO. LTD.

Instructions for Working "A.W." High-Speed Tool Steel.

Directions for Forging and Hardening.

Heat slowly and thoroughly to a cherry red, and forge in the ordinary way. When forged to the required shape, the point should be heated to a white melting heat, and allowed to soak at this heat until it commences to run, then place in an air blast to cool, and afterwards grind on a wet stone.

Note.—No water is required for hardening this steel. These directions should be carefully adhered to.

VICKERS, SONS, & MAXIM LIMITED, RIVER DON WORKS, SHEFFIELD.

Instructions for Working Vickers' "High-Speed" Steel.

Forging.—Heat the bar slowly to a yellow heat; forge at this heat without allowing the tool to cool lower than a bright red. It is better to place the tool in the fire several times rather than to forge at a heat higher than yellow or lower than bright red. The tool may be put in the fire again at once for hardening, but the best results are got by rough-grinding before hardening, in which case the tool should be put with its nose in lime or ashes to cool.

Hardening.—Heat the tool slowly up to a bright red heat, then rapidly to a brilliant yellow, and for machining ordinary material place on the ground (free from damp) to cool; if for use on particularly hard metals, it may be found advantageous to place it in a strong blast of air to cool. When cold, the tool, if only rough-ground, should be finished ground before tempering.

Grinding.—All grinding should be done on a stone with plenty of water on it.

Tempering.—The tool, if larger than 1½ in. square, may be reduced to the required temper, to suit the material operated upon, by placing the shank of the tool in a hot fire, with the blast off. The colour will be seen on the face of the tool, and for most purposes a bright blue will be found a satisfactory temper. After obtaining the required temper, put the tool in a dry place to cool. As a rule, it is not necessary to temper tools less than 1½ in. square.

CAMMELL, LAIRD, & CO. LTD.

Instructions for Treating Special Self-Hardening Tool Steel.

When it is required to run the lathe at an ordinary speed:—Smith the tool in the same way as an ordinary turning tool, and

heat the nose, say 2 in., to a white heat. Allow the tool to cool in the open air, grind, and it is ready for use.

When it is required to run the lathe faster than ordinary speed:—Smith the tool in the same way as an ordinary turning tool, and heat the nose, say 2 in., to a white heat. Allow the tool to cool in a dry place. When cold, grind, and let the cutting end of tool down on a hot bar to a dark blue colour, and keep until the colour has quite disappeared, then allow the tool to cool slowly, and it is ready for use.

Note.—The tool may be heated to the white heat in a smith's hearth, if care is taken not to use too fierce a blast.

THOS. FIRTH & SONS LIMITED, SHEFFIELD.

Instructions for Forging and Grinding "Firth's Speedicut."

INSTRUCTIONS "A."

For Tools for cutting Mild Steel, Soft Cast Iron, and all other ordinary classes of Material.

Forging.—Forge as you would any ordinary tool steel, but not until the portion to be forged has attained a uniform heat all through.

On no account continue forging below a red heat, or minute cracks will develop.

Allow no water to touch the steel while forging.

When forged to shape, reheat the tool end to a white heat, remove it smartly from the fire to anvil, and with light, sharp, successive blows hammer all the cutting part until it reaches a full red colour, say 1375° Fahr., or 746° Cent.; then cool off in air blast. The hammering improves the steel and secures a fine finish with little trouble. It also saves time, as a good smith will make this high heat his last forging heat; nothing, however, but hand hammering must then be done.

No tempering is required.

Instructions "B."

For Tools for cutting Tool Steel, Tires, Hard Cast Iron, and all other hard Materials.

After forging in accordance with the above instructions "A," re-heat the tool end to a white heat, but omit the subsequent hammering, and immediately slack off in either whale or cotton-seed oil.

This treatment will be sufficient for tools of strong section requiring little or no overhang, but in other cases—especially for delicate tools with a fine cutting edge liable to breakage through excessive strain—allow the tool to become quite cold after slacking off in the oil, then boil it in the same kind of oil for at least three-quarters of an hour to one hour in order to take out the internal strains.

Excellent results may also be attained by following out Instructions "B" in place of Instructions "A" for tools for cutting ordinary materials, when so desired.

Grinding.—Grind either quite dry or with a surplus of water on a stone or emery wheel; an intermittent or faulty supply of water must not be used.

Important.—Nick when hot; break when cold.

Instructions for Annealing.

Pack the steel to be annealed in a hermetically sealed tube or box filled with a mixture of lime, sand, or other non-conducting substance, or charcoal dust. Place it in a furnace at a low heat and gradually increase the heat to a full cherry red, say 1375° Fahr. or 746° Centigrade. Keep at this heat for about twice as long as for ordinary carbon steels. Then remove the box from the furnace and bury it in a similar mixture to that which you use for putting in the box and allow it to slowly cool out, taking care not to remove the steel from the

box until it is quite cool. The cooling down should take about 80 hours.

Note.—Annealing is only necessary when "Speedicut" has to be machined.

When the steel is annealed by us, the bars are stamped "Annealed."

INDEX.

3-9

Printed at THE DARIEN PRESS, *Edinburgh.*