Heavy-Duty Metal Bender

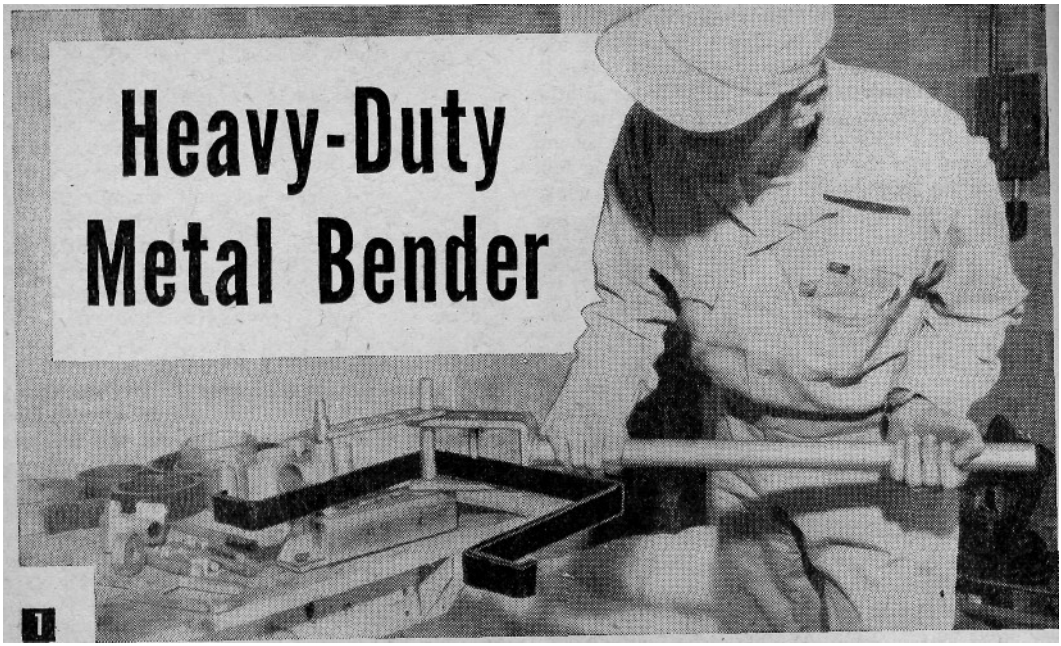

Making right angle bends in ¼ x 2 in. steel flat stock. Bending tool base is bolted to bench top.

It's large enough to handle most welding job shop projects, yet small enough to make it a worth while home-workshop tool

Craft Print Project No. 272

HERE'S a metal bender that will enable you to bend square, round or flat steel bar stock, angle iron or wind springs of heavy-gage steel wire. With the various bending-form attachments it is possible to make sharp corner bends as in Fig. 2; radius bends as in Fig. 3 or ornamental iron scroll work as in Figs. 4 and 5. It will handle ¼ x 2 in. flat steel bar stock cold (Fig. 1), or ½ x 2 in. stock if heated red hot.

Pipe and conduit can be bent cold by first filling the pipe with dry sand and using a ring form as in Fig. 6 to obtain the desired radius on the bend. The general rule is to make the radius at least four times greater than the outside diameter of the pipe. No wrench is needed for setting up the various bending forms and what is more important, all of the parts may be quickly disassembled so there is no chance of "locking" a piece of work inside the framework of the bender.

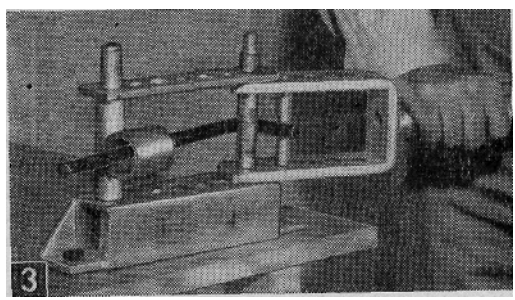

Bending 1/2 in. reinforced concrete rods cold. Rods up to 1 in. can be bent if heated red hot before bending.

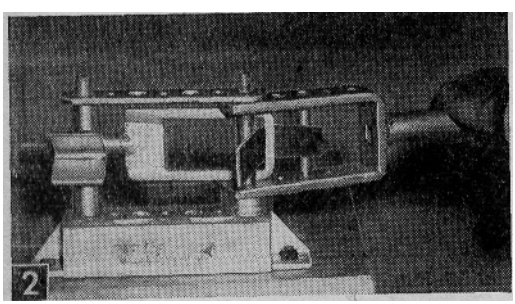

Forming sharp-corner bend in flat stock with accessory A in Fig. 8.

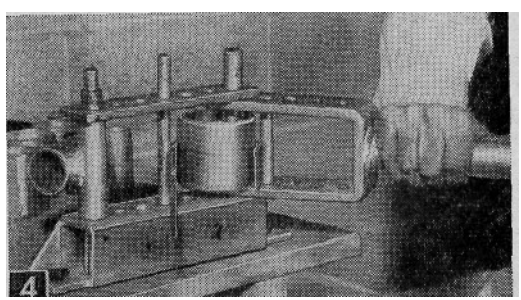

Bending flat stock to a definite radius around a short length of pipe used as a bending form.

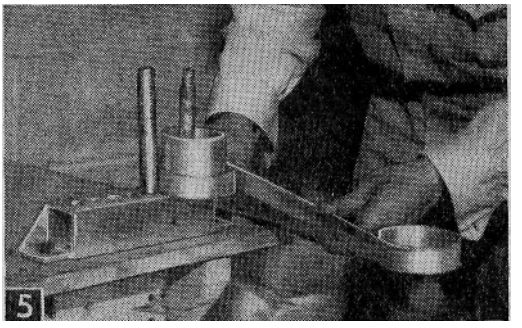

Ornamental scrolls of light flat stock can be bent without the use of the hand lever.

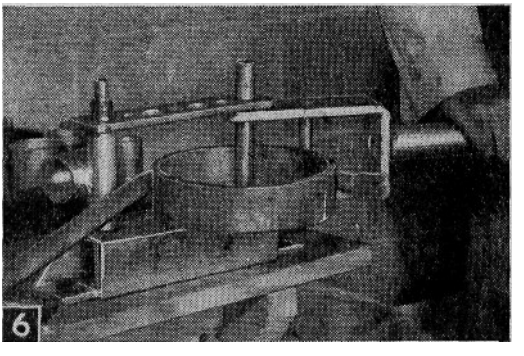

Pipe and conduit can be bent without collapsing by filling with dry sand and plugging the ends before doing the bending.

MATERIALS LIST

All Dimensions in Inches

No. Req.	Size and description	Use
1	1 x 24 long standard pipe	hand lever
1	3/8 x 2 x 18 hot-rolled mild steel	hand lever
1	¼ x 2 x 2 x 20 long hot-rolled angle iron	base
1	¼ x 2 x 8 hot-rolled mild steel	base top
1	½ dia. x 26 long cold-rolled or tool steel	bender pins
1	½-13 x 5 bolt with nut	accessory A
1	½-13 x 2 bolt with nut	accessory F
1	3/8 x 3/8 x 16 steel key stock	accessory A
1	¼ x 1½ x 2 cold-rolled steel	accessory A
1	3/16 x ¾ x 6 cold-rolled steel	accessory F
1	3/8 x ¾ x ¾ cold-rolled steel	accessory F
1	1/8 x 1½ x 1½ x 8 long angle iron	accessory E & B
1	¾ x 10 long standard pipe	accessory B & D
1	½ x 3 long standard pipe	accessory B & pin
1	1 x 2 long standard pipe	accessory D
5	¾ I.D. plain washers	spacer
1 each	1¾ length of pipe cut from ¾ to 8 pipe	bending rings

After purchasing the needed materials (see Materials List) start construction by making the base and base top, Fig. 7. Weld the two pieces of angle iron for the base together, then lay out and centerpunch the base top for the holes. Now center and clamp the top to the base and drill holes straight through all three pieces so that all holes will be perpendicular to the base and in line with one another. Make the hand lever (Fig. 7) next, again welding all the parts together before drilling the holes. Do not attempt to heat and bend the fork from one piece because sharp, square inside corners are needed for clearance. Clamp a 2¾ in. spacer block between the fork tines to hold the pieces in place while welding.

Now make the bender pins (Fig. 7). Although cold-rolled steel can be used for these pins there is a possibility of the pins bending if the tool is overloaded Pins made of tool steel or drill rod, hardened by heat treatment would be better. If this type of material is not readily available in your locality, pick up some used auto steering gear rods or rear axles at an auto wrecking yard. These rods, of course, would have to be annealed and turned down to

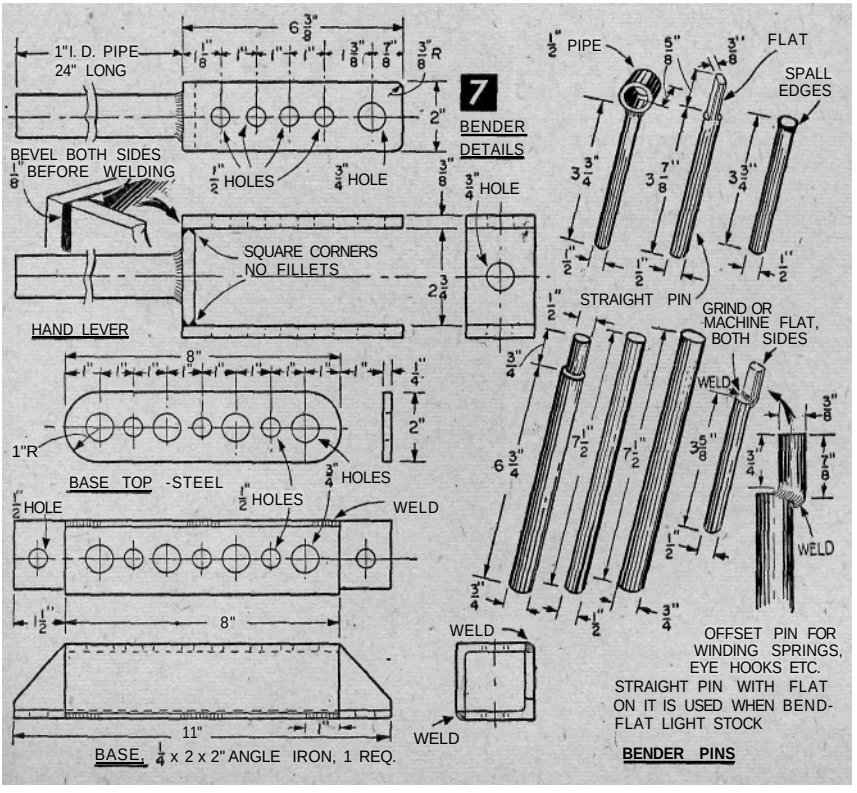

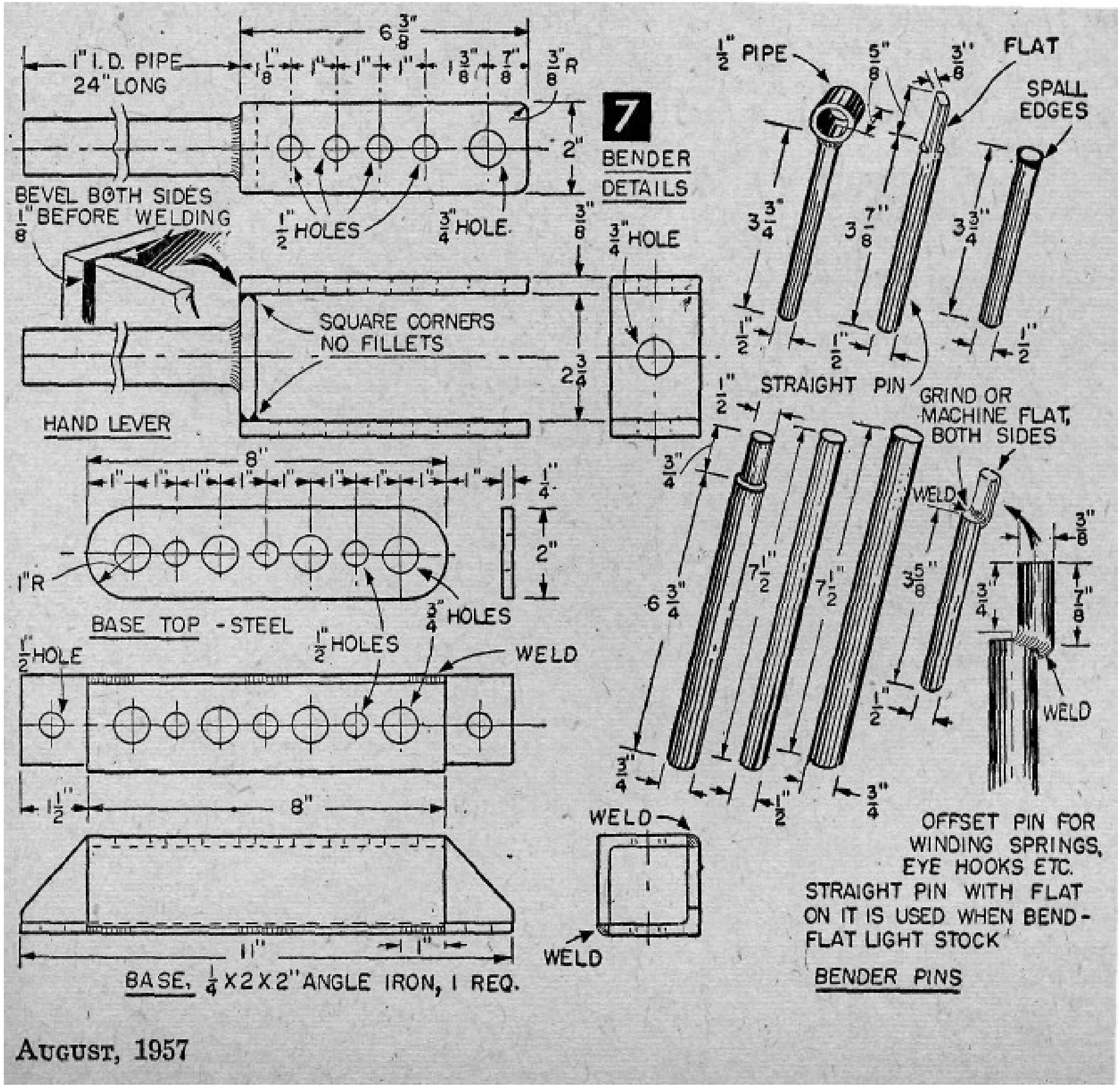
7
BENDER DETAILS
1" I.D. PIPE 24" LONG
6 3/8"
1 1/8" 1" 1" 1" 1 3/8" 7/8"
3/8" R
2"
BEVEL BOTH SIDES 1/8" BEFORE WELDING
1/2" HOLES
3/4" HOLE
3/8"
3/4" HOLE
SQUARE CORNERS NO FILLETS
2 3/4"
HAND LEVER
8"
1" 1" 1" 1" 1" 1" 1" 1" 1"
1/4"
2"
1" R
3/4" HOLES
BASE TOP - STEEL
1/2" HOLE
1/2" HOLES
WELD
1 1/2"
8"
11"
1"
BASE, 1/4 X 2 X 2" ANGLE IRON, 1 REQ.
WELD
WELD
1/2" PIPE
5/8"
3/8"
FLAT
SPALL EDGES
3 3/4"
3 7/8"
3 3/4"
1/2"
1/2"
1/2"
STRAIGHT PIN
1/2"
3/4"
GRIND OR MACHINE FLAT, BOTH SIDES
WELD
6 3/4"
7 1/2"
7 1/2"
3 5/8"
3/8"
3/4"
7/8"
1/2"
WELD
3/4"
1/2"
3/4"
OFFSET PIN FOR WINDING SPRINGS, EYE HOOKS ETC.
STRAIGHT PIN WITH FLAT ON IT IS USED WHEN BEND-FLAT LIGHT STOCK
BENDER PINS

electrodes or hard surface after welding. Mild steel at this point will wear too quickly. Use the offset pin for winding springs, hooks and eyes. Use the straight pin with 3/8 in. flats for bending light flat bar stock on top of the bending tool. The threaded end of accessory F in Fig. 8 is inserted into the pin having the 5/8 in. length of ½ in. pipe welded on it. Adjustment for thickness of rod being bent is made by turning nut or end of accessory F.

For large radius bends on round or flat stock 1¾ in. lengths of various sizes of standard and extra heavy pipe (Fig. 8G), are used as bending forms. These forms or rings are not fastened to the bender itself, but merely placed over the center pin as in Figs. 4 and 6. The work being bent is forced around the ring by the smaller pin in the hand lever. Fourteen different ring sizes can be cut from ¾ to 8 in. pipe for use on this metal bender. If you have a bending job that calls for the forming of many duplicate pieces, a special accessory could be designed and built to suit your particular needs.—PHILLIP M. WILSON.

size on a metal-turning lathe. To anneal the rods, heat to a cherry red and place in lime to cool slowly. After machining, again heat to a cherry red and plunge into burned motor oil holding it there for about 5 to 10 seconds or until desired hardness is produced. Hardness can be tested with a file. If the steel shows a file mark it is still too soft and should be reheated and again quenched in oil for extra hardness.

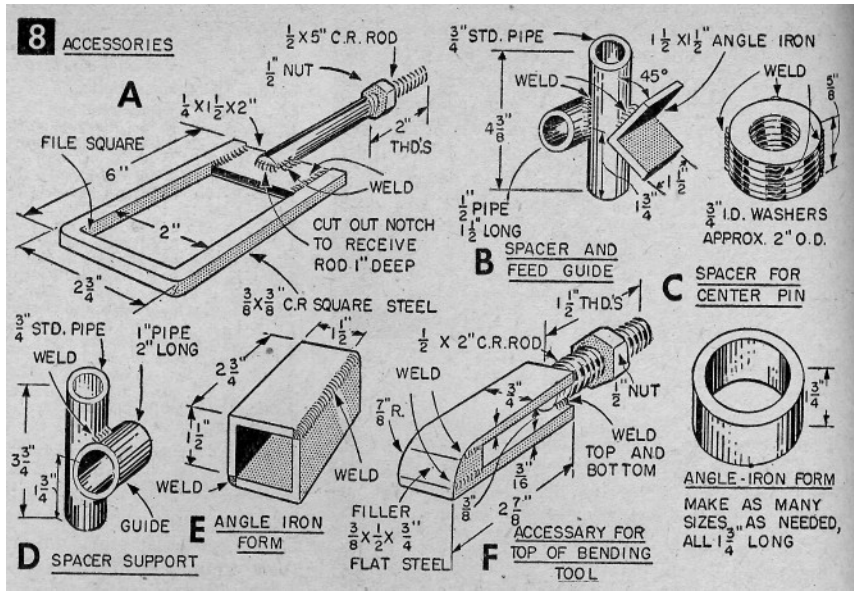

For bending sharp corners in flat bar stock make the accessory shown in Fig. 8A. Use 3/8-in. square, steel key stock for the bent part and file the inside corners at the bends to sharp corners. Make a ½ x 1 in. cutout in the ¼ x 1½ x 2 filler piece to take the ½ in.-13 threaded bolt with the head cut off. Assemble all the parts and weld together.

To support accessory A make the spacer and feed guide (Fig. 8B). In use these two parts are assembled with the bend as shown in Fig. 2. A 5/8 in. thick stack of ¾ in. ID. washers are used as a spacer under the hand lever. Run a bead of weld metal across the stack of washers in four places (Fig. 8C) to keep them together.

The spacer support (Fig. 8D) is used to hold square or round stock as in Fig. 3. Make the angle-iron form (Fig. 8E) by boxing two pieces of angle iron and welding the corners. Dress the welds smoothly on an abrasive wheel rounding the welded corners only so that these corners can be used for making bends with a small radius as in Fig. 9. One leg of the angle iron must be notched before bending.

The accessory shown in Fig. 8F is for use on top of the bending tool for making hooks or eyes on the ends of rods (Fig. 10), or winding a spring (Fig. 11). When welding the accessory, make the welds across the 7/8 in. radius with stainless steel

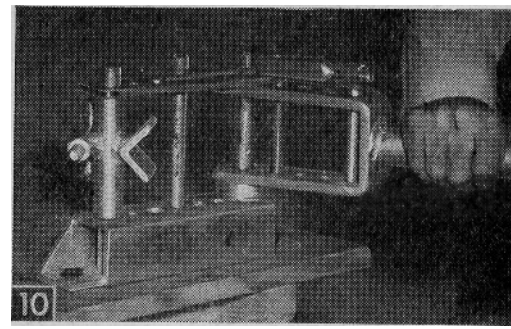

Forming eye on end of rod with accessory F in Fig. 8. After forming eye, turn rod over and make slight reverse bend in order to make the center of eye hole line up with the shank.

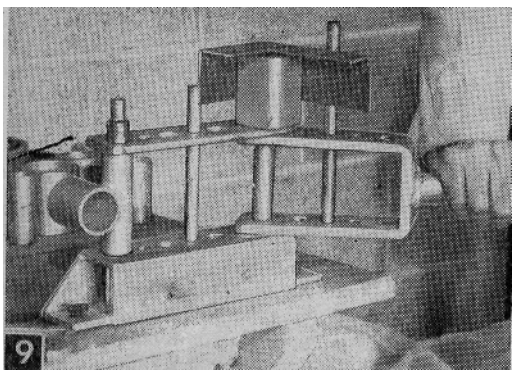

Using accessory E in Fig. 8 to bend angle iron that has been notched 90° at point of bend.

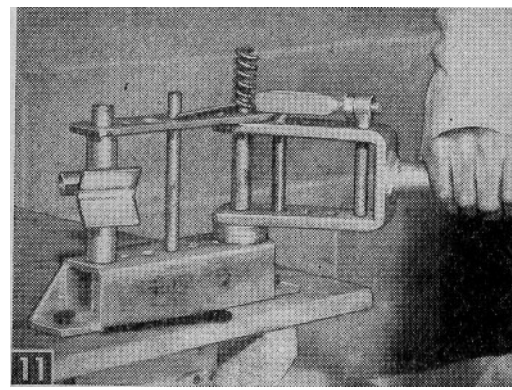

Winding a spring with accessory F and offset pin.

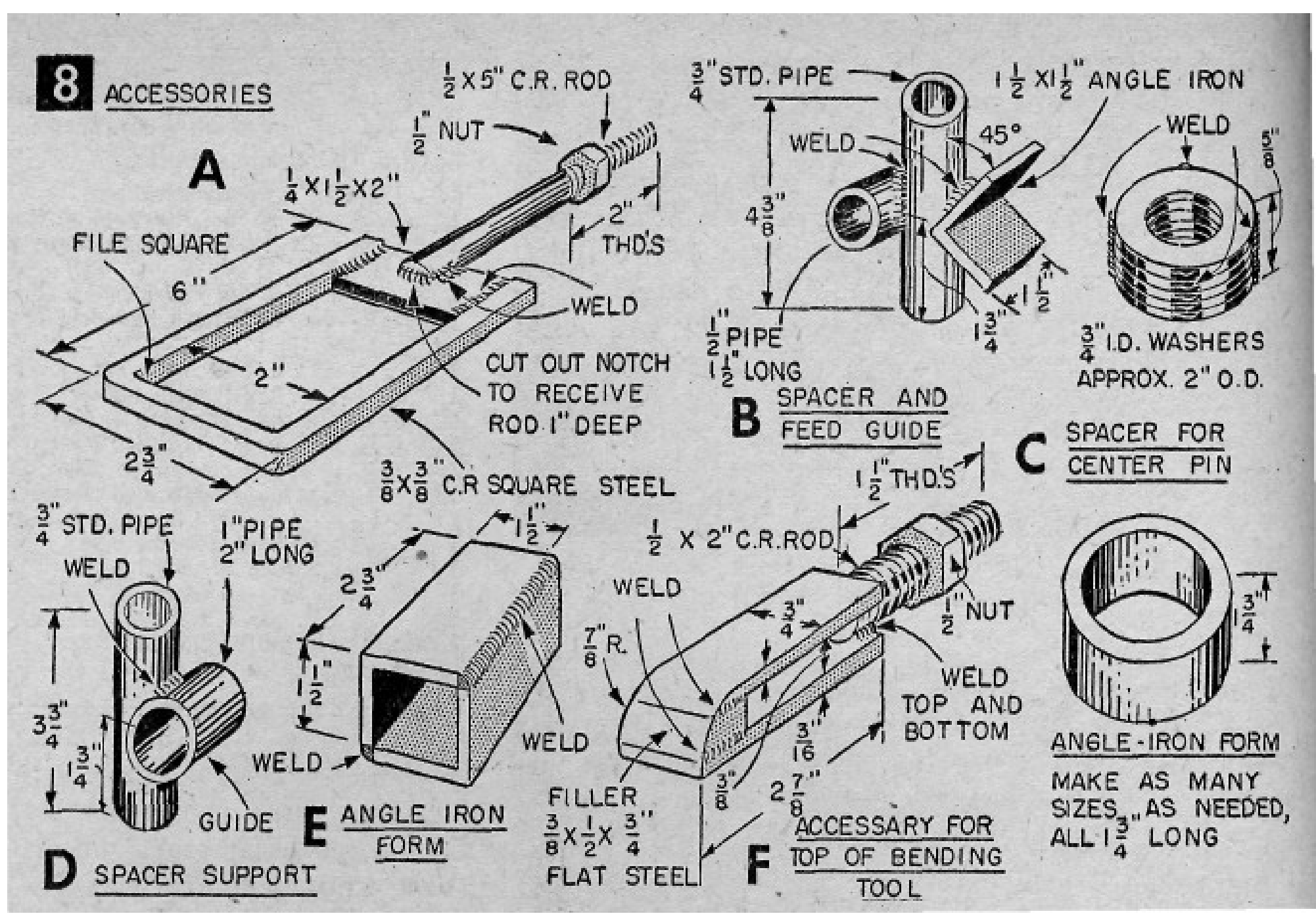
8 ACCESSORIES
A
1/2 X 5" C.R. ROD
1/2" NUT
1/4 X 1 1/2 X 2"
2" THD'S
FILE SQUARE
6"
WELD
2"
CUT OUT NOTCH TO RECEIVE ROD 1" DEEP
2 3/4"
3/8 X 3/8" C.R SQUARE STEEL
3/4" STD. PIPE
1 1/2 X 1 1/2" ANGLE IRON
WELD
45°
4 3/8"
1/2" PIPE 1 1/2" LONG
1 3/4"
1 1/2"
B SPACER AND FEED GUIDE
WELD
5/8"
3/4" I.D. WASHERS APPROX. 2" O.D.
C SPACER FOR CENTER PIN
3/4" STD. PIPE
WELD
1" PIPE 2" LONG
3 3/4"
1 3/4"
GUIDE
D SPACER SUPPORT
2 3/4"
1 1/2"
1 1/2"
WELD
E ANGLE IRON FORM
1 1/2" THD'S
1/2 X 2" C.R. ROD
WELD
7/8" R.
3/4"
1/2" NUT
WELD TOP AND BOTTOM
3/16"
3/8"
2 7/8"
FILLER 3/8 X 1/2 X 3/4" FLAT STEEL
F ACCESSARY FOR TOP OF BENDING TOOL
1 3/4"
ANGLE-IRON FORM
MAKE AS MANY SIZES AS NEEDED, ALL 1 3/4" LONG