SHOP PROJECT

Add a Limit Switch To Your Lathe Carriage

IN TURNING OPERATIONS where it is necessary to run the cutting tool as close to the headstock as possible, there's usually a risk of running the compound rest into the chuck or dog. While a micrometer stop is satisfactory when hand-feeding, extra caution should be exercised when you use power feed, because if the feed isn't disengaged before the stop is reached, damage to lead screw and gears could occur. With this attachment, the carriage can be fed without attention since the lathe automatically shuts off when the compound rest hits a switch of the attachment.

To minimize the chance of damage to the ways, make the clamp of aluminum. The pair of 1/4-in. setscrews is simply intended to insure parallelism between the two clamping members. Two hex-head machine screws are used to secure the clamp to the ways.

Though you can use several types of microswitches, I found that the one indicated on the drawing performs adequately. It has a rating of 15 amps., plus the capability of handling the current needed for my Atlas lathe motor. It also permits enough free travel to take up any carriage overrun. (There is always a slight carriage overrun after power is cut, especially when using a chuck, light cut or combination of both.) The switch shown permits a carriage overrun of approximately .25 in.

To attach the switch to the angle, drill and tap two holes and fasten with machine screws. To prevent shorted connections, separate switch and angle with insulating material. The aluminum case should also be lined with the same material.

—Arthur Volz

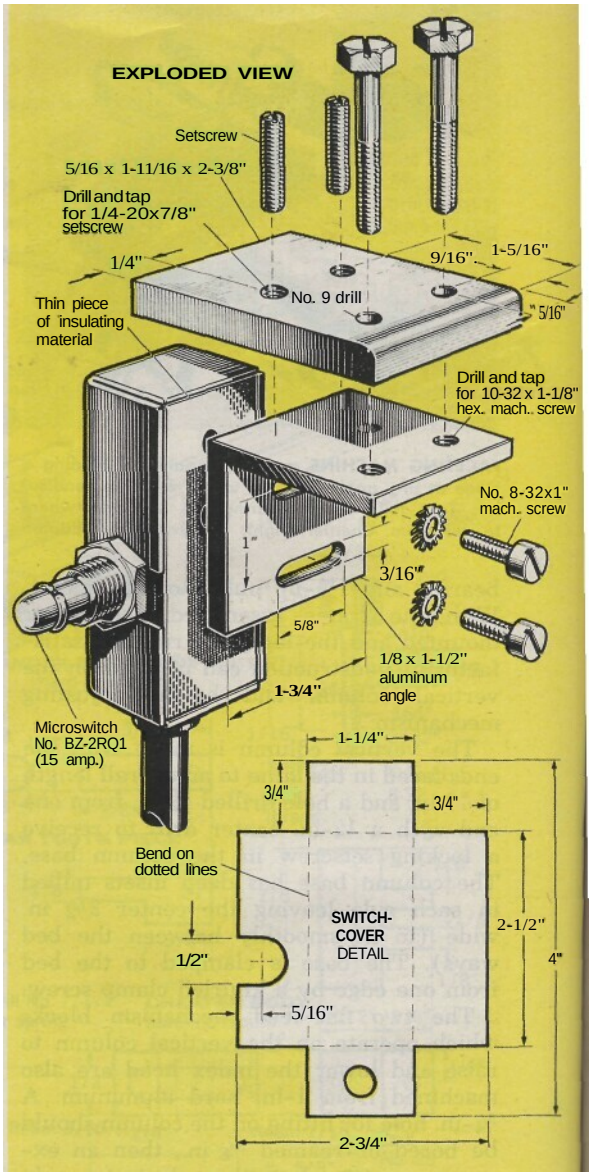
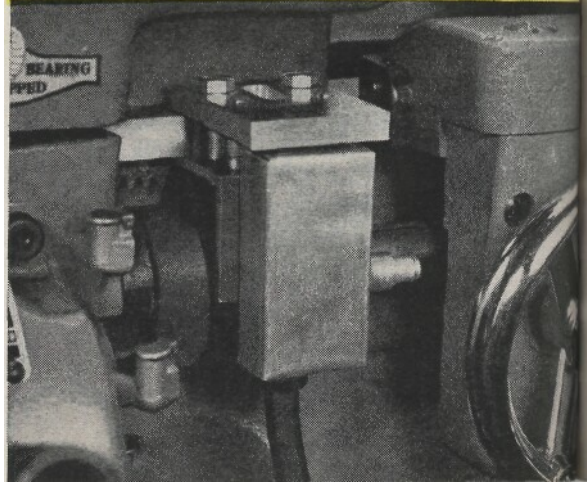
ELONGATED HOLE, obvious in photo but not used in art, is for adapting clamp to other uses as needed